S-21 OUTBOUND

ROTAX 915iS Installation

PARTS MANUAL

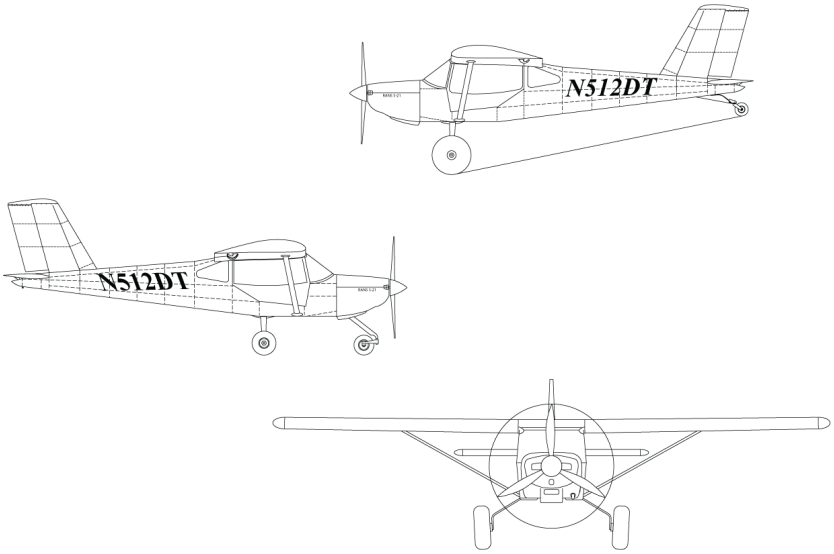

Serial Number:

Registration Number:

COPYRIGHT ©

RANS DESIGNS
4600 HWY 183 Alt
HAYS, KANSAS, USA 67601
785-625-6346
www.rans.com

STEP 1:

PARTS MANUAL AS SHIPPED or PRINTED.
PLACE IN 3-RING BINDER TO SECURE.

PARTS DRAWING PAGE

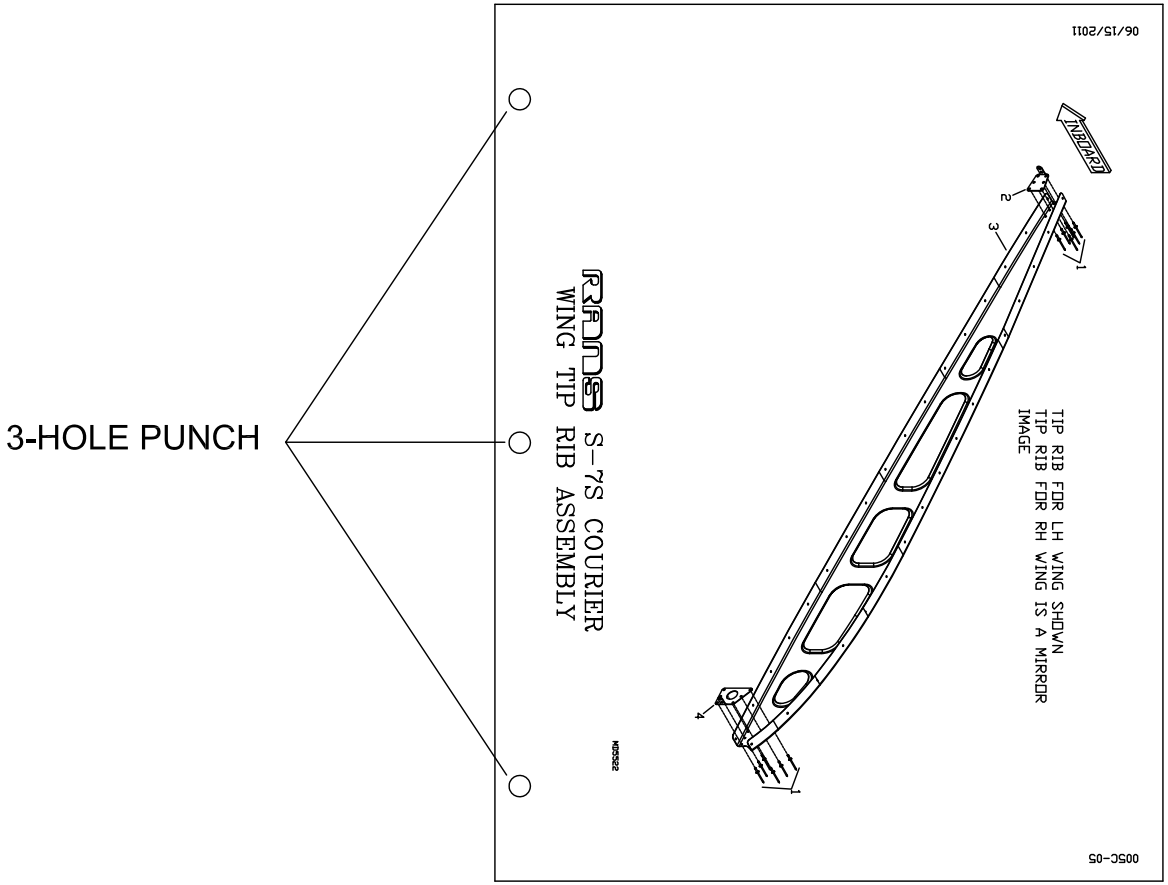

3-HOLE PUNCH

EXAMPLE ONLY.
MAY NOT REPRESENT ACTUAL PAGES
FROM YOUR MANUAL.

SEE NEXT PAGE

STEP 2:

OPEN 3-RING BINDER.
REMOVE PARTS DRAWING PAGE AND
ROTATE 180° TO FACE
CORRESPONDING
PARTS DESCRIPTION PAGE.
REPEAT FOR REMAINING PAGES

PARTS DRAWING PAGE

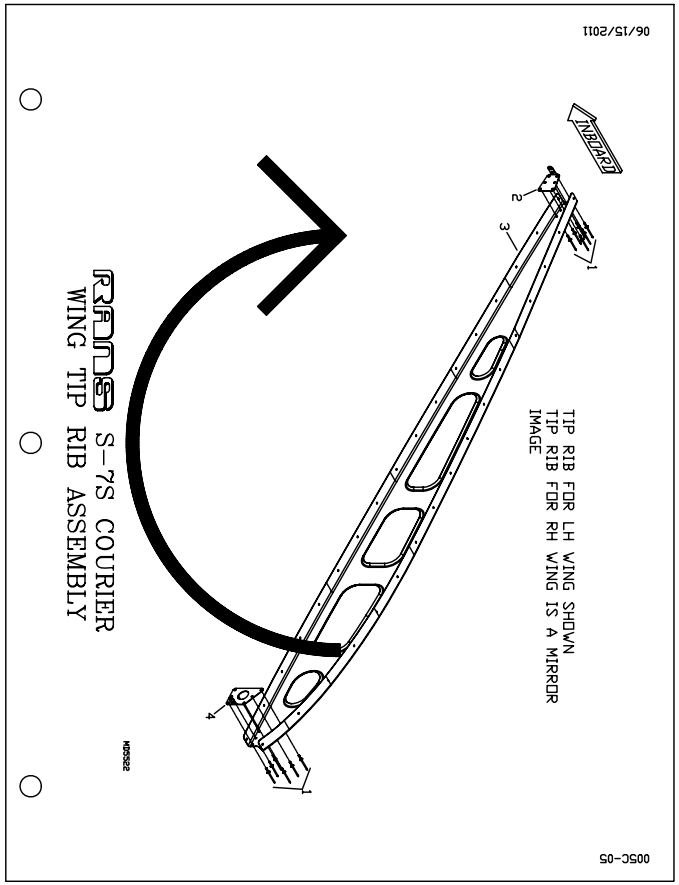

PARTS DESCRIPTION PAGE

PAGE 005C-06

S-7S COURIER - WING - TIP RIB ASSEMBLY

# DESCRIPTION	PART NUMBER	QUANTITY
1. 1/8" ALUMINUM RIVET	AAPQ-41	24
2. RIB CLIP TRAILING EDGE - LH	KPWI0372-L	4
2. RIB CLIP TRAILING EDGE - RH	KPWI0372-R	1
3. WING TIP RIB - LH	KPWI0544-L	1
3. WING TIP RIB - RH	KPWI0544-R	1
4. RIB CLIP LEADING EDGE - LH	KPWI0373-L	1
4. RIB CLIP LEADING EDGE - RH	KPWI0373-R	1

6/15/2011

EXAMPLE ONLY.
MAY NOT REPRESENT ACTUAL PAGES
FROM YOUR MANUAL.

SEE NEXT PAGE

STEP 3:

PARTS DRAWING PAGE
FACES CORRESPONDING
PARTS DESCRIPTION PAGE
WHEN FINAL SECURED IN
BINDER

PARTS DRAWING PAGE

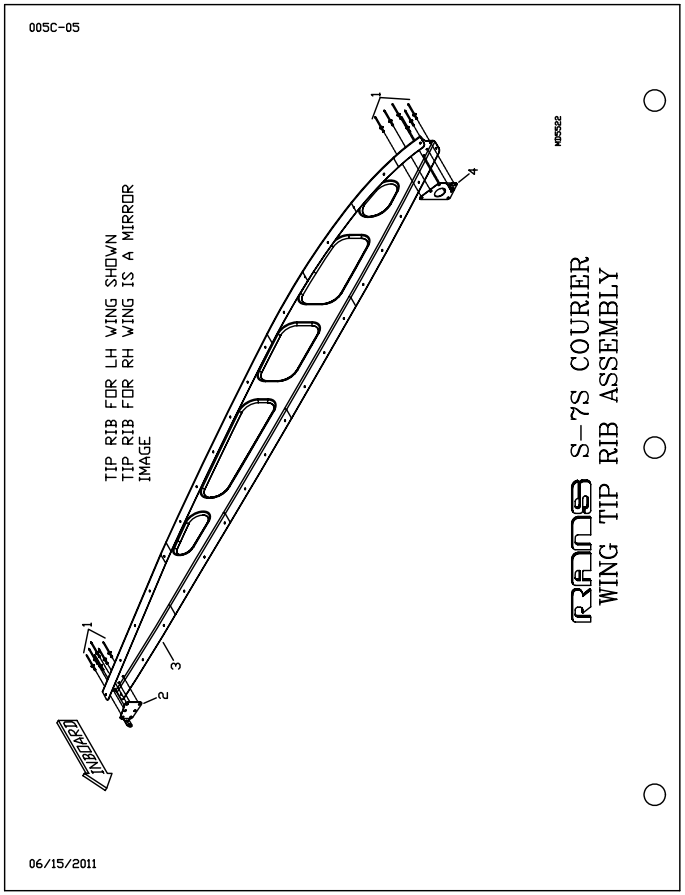

PARTS DESCRIPTION PAGE

PAGE 005C-06

S-7S COURIER - WING - TIP RIB ASSEMBLY

#	DESCRIPTION	PART NUMBER	QUANTITY
1.	1/8" ALUMINUM RIVET	AAPQ-41	24
2.	RIB CLIP TRAILING EDGE - LH	KPWI0372-L	4
2.	RIB CLIP TRAILING EDGE - RH	KPWI0372-R	1
3.	WING TIP RIB - LH	KPWI0544-L	1
3.	WING TIP RIB - RH	KPWI0544-R	1
4.	RIB CLIP LEADING EDGE - LH	KPWI0373-L	1
4.	RIB CLIP LEADING EDGE - RH	KPWI0373-R	1

6/15/2011

EXAMPLE ONLY.
MAY NOT REPRESENT ACTUAL PAGES
FROM YOUR MANUAL.

RANS S-21 OUTBOUND - ROTAX 915iS

PARTS MANUAL

TABLE OF CONTENTS

ROTAX 915iS - ENGINE MOUNT INSTALLATION..... 011-01 / 915iS
ROTAX 915iS - FIREWALL ITEMS INSTALLATION…..... 011A-01 / 915iS
ROTAX 915iS - ENGINE ELECTRICAL ACCESSORY INSTALLATION…..... 011A-03 / 915iS
ROTAX 915iS - OPTIONAL BATTERY BOX ASSEMBLY AND INSTALLATION…..... 011A-05 / 915iS
ROTAX 915iS - OPTIONAL EARTHX BATTERY BOX ASSEMBLY AND INSTALL…..... 011A-07 - 915iS
ROTAX 915iS - FUSE BOX AND PCV INSTALLATION…..... 011A-09 / 915iS
ROTAX 915iS - ENGINE ELECTRICAL…..... 011A-11 / 915iS
ROTAX 915iS - FUEL SYSTEM INSTALLATION - FIREWALL FORWARD…..... 011B-01 / 915iS
ROTAX 915iS - FUEL PUMP/FILTER INSTALLATION…..... 011B-03 / 915iS
ROTAX 915iS - FUEL SYSTEM - HEADER TANK…..... 011B-05 / 915iS
ROTAX 915iS - FUEL SYSTEM - FUSELAGE…..... 011B-07 / 915iS
ROTAX 915iS - OIL COOLER & RADIATOR MOUNT INSTALLATION…..... 011C-01 / 915iS
ROTAX 915iS - LUBRICATION SYSTEM INSTALLATION…..... 011C-03 / 915iS
ROTAX 915iS - COOLING SYSTEM INSTALLATION…..... 011C-05 / 915iS
ROTAX 915iS - DUAL CABIN HEATER INSTALLATION - RADIANT…..... 011C-07 / 915iS
ROTAX 915iS - INTERCOOLER INSTALLATION…..... 011C-09 / 915iS
ROTAX 915iS - INDUCTION SYSTEM INSTALLATION…..... 011C-11 / 915iS
ROTAX 915iS - THROTTLE ASSEMBLY…..... 011D-01 / 915iS
ROTAX 915iS - COWLING ASSEMBLY AND INSTALLATION…..... 011E-01 / 915iS
ROTAX 915iS - OIL CHECK DOOR INSTALLATION…..... 011E-03 / 915iS
ROTAX 915iS - OPTIONAL 11.3" SPINNER ASSEMBLY…..... 011F-01 / 915iS
ROTAX 915iS - OPTIONAL WHIRLWIND PROPELLER INSTALLATION…..... 011F-03 / 915iS
ROTAX 915iS - OPTIONAL AIRMASTER PROPELLER INSTALLATION…..... 011F-05 / 915iS
ROTAX 915iS - OPTIONAL REMOTE CHARGING POST INSTALLATION…..... 011G-01 / 915iS

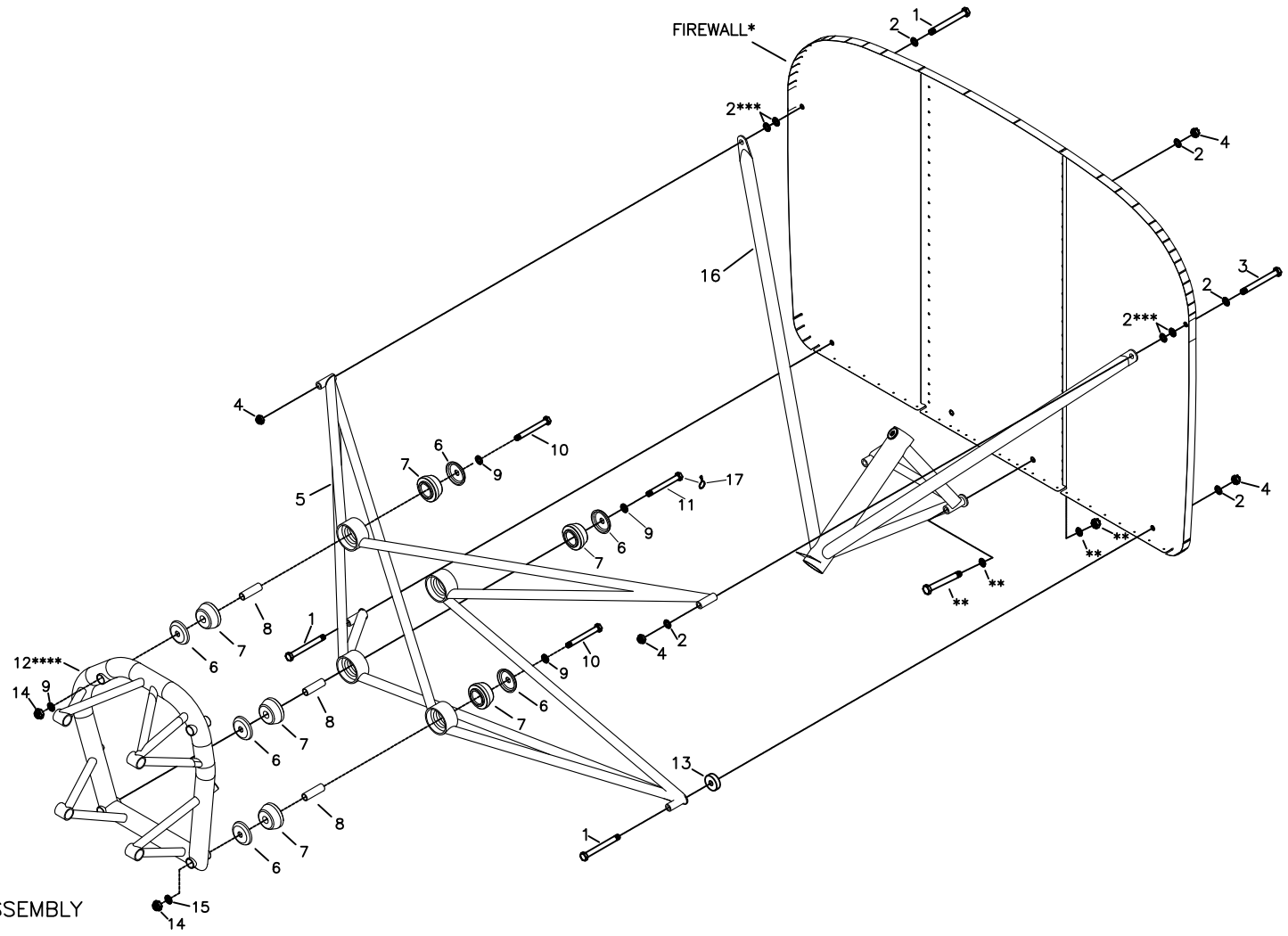

* REFER TO BOOT COWL ASSEMBLY FOR FIREWALL ASSEMBLY.

** REFER TO TRIKE – NOSE GEAR INSTALL

*** TAILDRAGGER ONLY

**** SUPPLIED WITH ENGINE

RANS S-21 OUTBOUND
ROTAX 915iS
ENGINE MOUNT INSTALLATION

MD5657
REV. – ORIG

RANS S-21 OUTBOUND

ROTAX 915iS - ENGINE MOUNT INSTALLATION

#	DESCRIPTION	PART NUMBER	QUANTITY
1.	5/16" Bolt	AN5-35A	3
2.	5/16" Thick Washer	AN960-516	10
3.	5/16" Bolt	AN5-34A	1
4.	5/16" Tensile Nut	AN365-524A	4
5.	Engine Mount	KAPW0060	1
6.	Cup Washer	KPPW0299	8
7.	Engine Mount Rubber Isolator	KPPW0298	8
8.	Bushing	KPPW0294	4
9.	3/8" Thick Washer	AN960-616	6
10.	3/8" Bolt	AN6-40A	3
11.	3/8" Bolt - Drilled Head	AN6H-40A	1
12.	Engine Suspension Frame*	KSPW0099	0
13.	Engine Mount Spacer	KPAC0279	2
14.	3/8" Tensile Nut	AN363-624A	3
15.	3/8" Thin Washer	AN960-616L	1
16.	Nose Gear Mount - Rotax (Trike Only)	KAPW0075	1
17.	Saftey Wire **	-----	0

*Supplied with Engine
**Builder Supplied

09/11/2018

011A-01 / 915iS

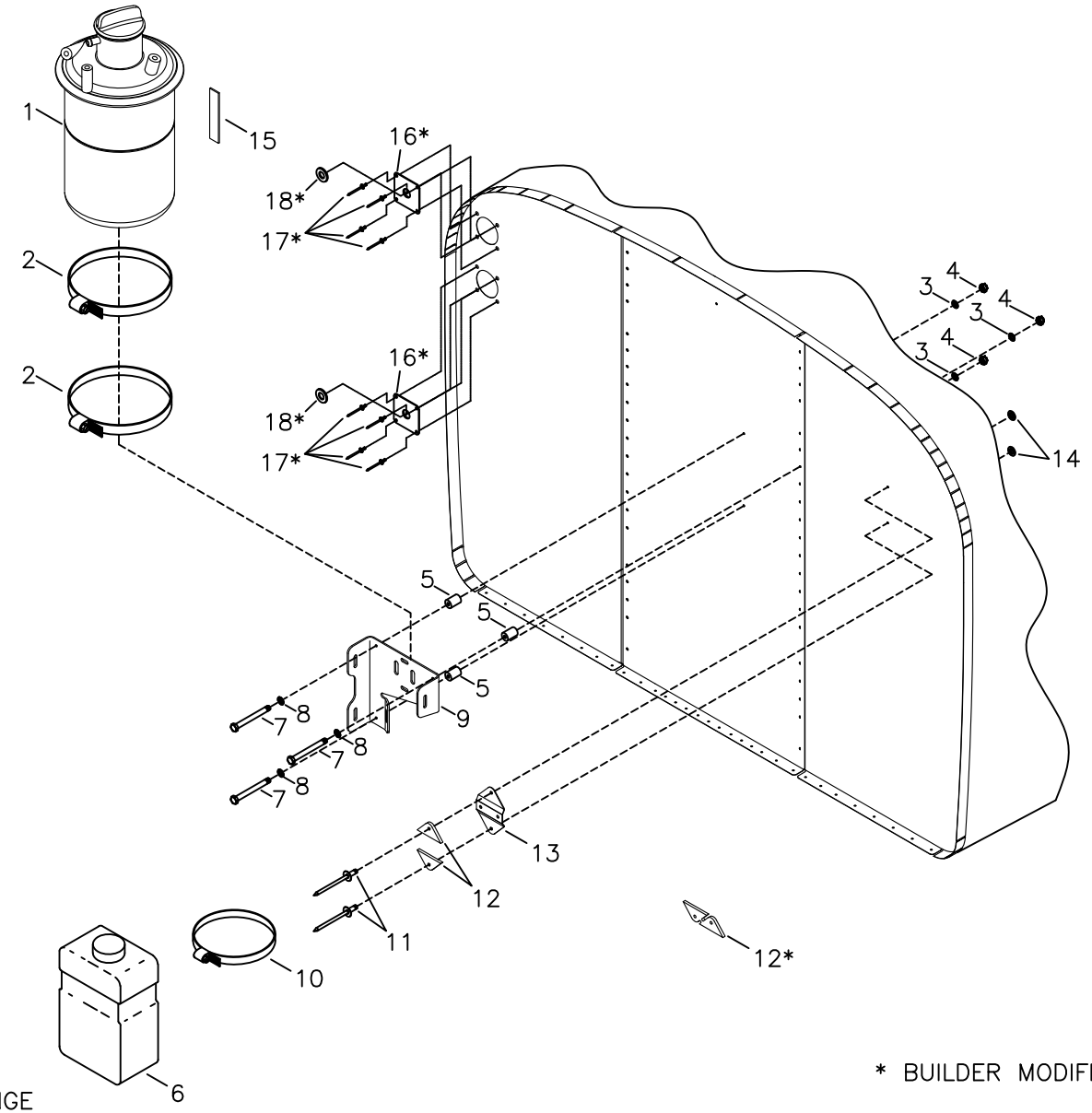

* AMP STANDARD SQUARE FLANGE
24 PIN RECEPTACLE & PLUG
MAY ALSO BE USED

* BUILDER MODIFIES

RANS S-21 OUTBOUND
ROTAX 915iS
FIREWALL ITEMS INSTALLATION

MD5657
REV. – ORIG

RANS S-21 OUTBOUND

ROTAX 915iS - FIREWALL ITEMS INSTALLATION

#	DESCRIPTION	PART NUMBER	QUANTITY
1.	Oil Tank *	-----	0
2.	Hose Clamp - 6"	5-5288	2
3.	3/16" Large Washer	AN970-3	3
4.	3/16" Tensile Nut	AN365-1032A	3
5.	Raw Stock - 3/8" x .095" Aluminum Tube	KPST0132	1
5.	3/8" x .095" x 1/2" Aluminum Bushing **	KPST0132	0
6.	Overflow Bottle	KSPW0072	1
7.	3/16" Bolt	AN3-10A	3
8.	3/16" Thin Washer	AN960-10L	3
9.	Oil Bottle Mount	KPPW0261	1
10.	Hose Clamp - 4"	5-5256	1
11.	1/8" Stainless Steel Rivet - Cherry Q	CCPQ-44	2
12.	Spacer Shim - Mount Bracket	KPPW0230	1
13.	Mount Bracket - Coolant Recovery Bottle	KPPW0231	1
14.	1/8" Small Brass Washer	AN960-B4	2
15.	1" Black Foam Tape	KSAC0011	3 in.
16.	.025" Sheet (2" x 2") **	KAAC0042-12	2
17.	3/16" Stainless Steel Rivet - Cherry Q	CCPQ-62	8
18.	Rubber Grommet	MS35489-17	2

*Supplied with Engine
**Builder must fabricate from raw stock

SOME DUPLICATE HARDWARE
NOT SHOWN FOR CLARITY

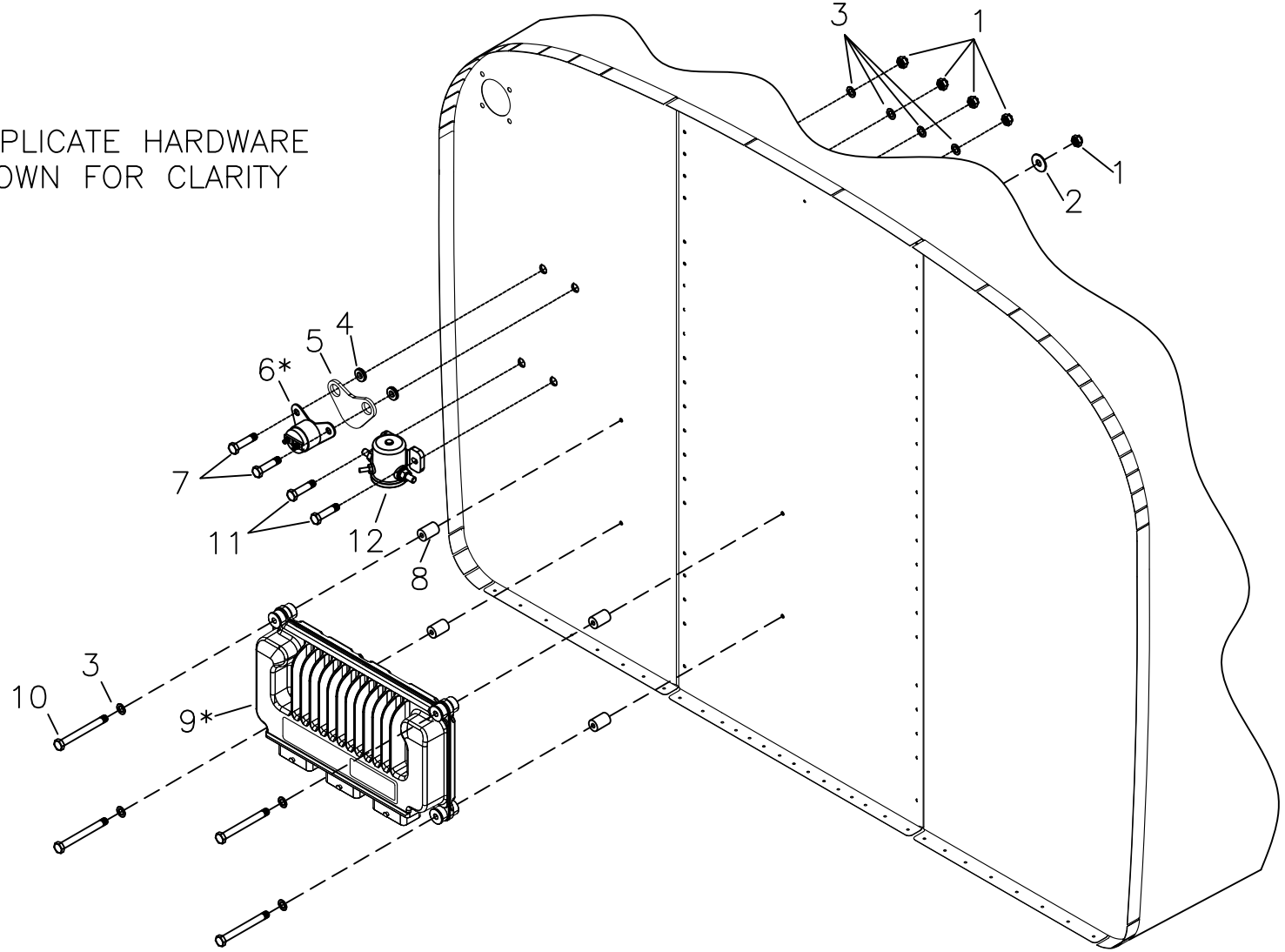

* SUPPLIED WITH ENGINE

RANS S-21 OUTBOUND
ROTAX 915iS
ENGINE ELECTRICAL ACCESSORY INSTALLATION

MD5657
REV. – ORIG

RANS S-21 OUTBOUND

ROTAX 915iS - ENGINE ELECTRICAL ACCESSORY INSTALLATION

#	DESCRIPTION	PART NUMBER	QUANTITY
1.	3/16" Shear Nut	AN364-1032A	8
2.	3/16" Large Washer	AN970-3	4
3.	3/16" Thin Washer	AN960-10L	8
4.	3/16" Rubber Grommet	KSAC0002	2
5.	Starter Relay Isolator Plate	KPES0032	1
6.	Starter Solenoid *	-----	0
7.	3/16" Bolt	AN3-5A	2
8.	3/8" x .095" x 1/2" Aluminum Bushing **	KPST0132	0
9.	Engine Control Unit *	-----	0
10.	3/16" Bolt	AN3-16A	4
11.	3/16" Bolt	AN3-4A	2
12.	Master Solenoid	KSPW0140	1

*Supplied with Engine
**Builder must fabricate from raw stock

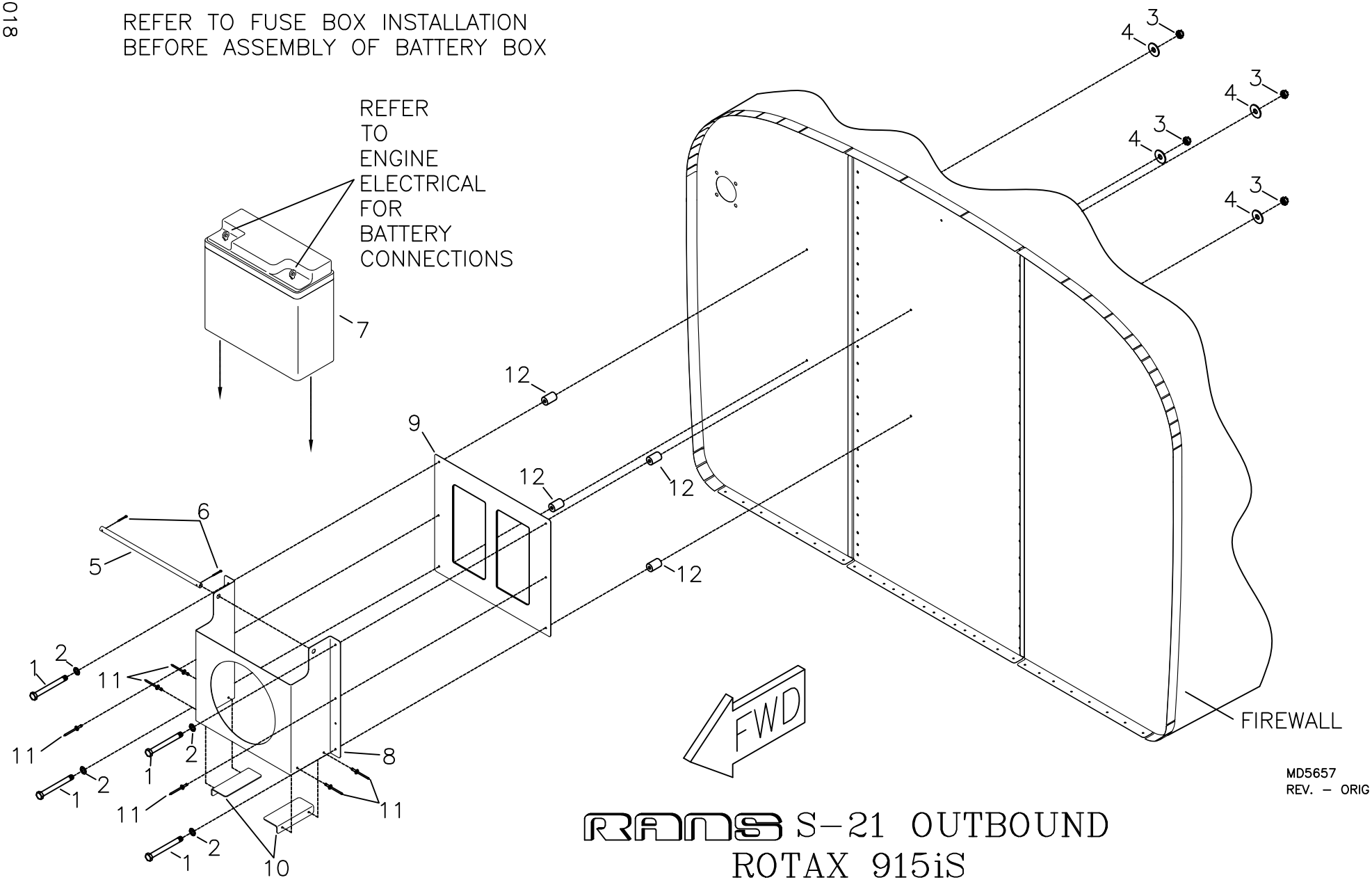

RANS S-21 OUTBOUND
ROTAX 915iS
OPTIONAL BATTERY BOX ASSEMBLY AND INSTALLATION

RANS S-21 OUTBOUND

ROTAX 915iS - OPTIONAL BATTERY BOX ASSEMBLY AND INSTALLATION

#	DESCRIPTION	PART NUMBER	QUANTITY
1.	3/16" Bolt	AN3-10A	4
2.	3/16" Thin Washer	AN960-10L	4
3.	3/16" Shear Nut	AN364-1032A	4
4.	3/16" Large Washer	AN970-3	4
5.	Battery Bar *	BAT-BAR-503/582	1
6.	Small Cotter Pin	MS24665-134	2
7.	Battery **	PS12150-NB	0
8.	Battery Box Front Plate	BAT-BOX-1	1
9.	Battery Box Mount Plate	BAT-BOX-2	1
10.	Battery Box Support Angle	BAT-BOX-3	2
11.	1/8" Stainless Steel Rivet - Cherry Q	CCPQ-42	6
12.	3/8" x .058" x 1/2" Aluminum Bushing ***	KAAC0044-3	1

* Builder Modifies
** May be purchased seperately, call RANS Parts Dept. for pricing.
*** Fabricate from Raw Stock

REFER TO FUSE BOX INSTALLATION
BEFORE ASSEMBLY OF BATTERY BOX

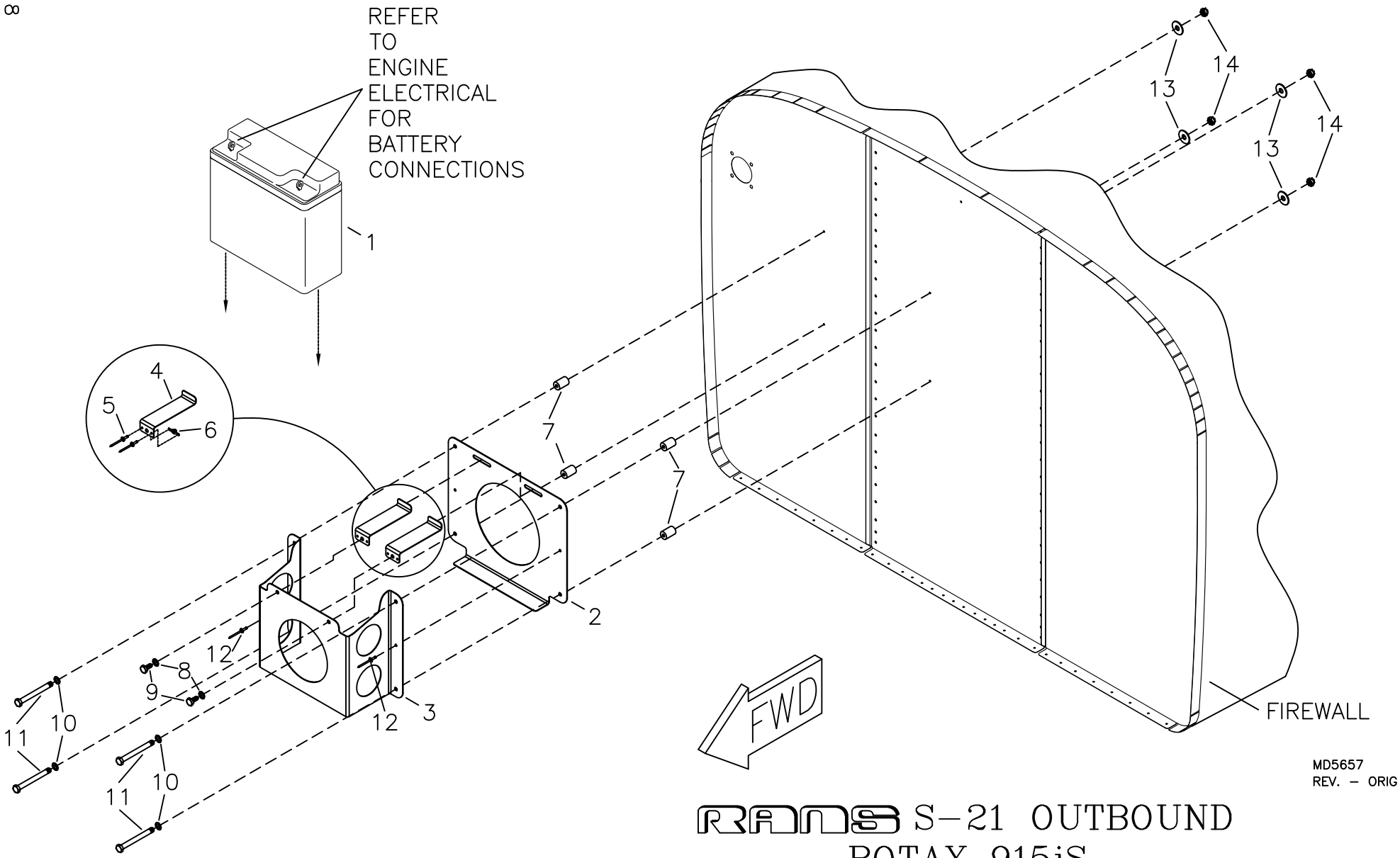

MD5657
REV. – ORIG

RANS S-21 OUTBOUND
ROTAX 915iS

OPTIONAL EARTH X BATTERY BOX ASSEMBLY AND INSTALLATION

RANS S-21 OUTBOUND

ROTAX 915iS - OPTIONAL EARTHX BATTERY BOX ASSEMBLY AND INSTALLATION

#	DESCRIPTION	PART NUMBER	QUANTITY
1.	EarthX Battery ETX680 *	KSPW0168	0
2.	EarthX Battery Box Mount Plate	KPES0056	1
3.	EarthX Battery Box Front plate	KPES0057	1
4.	EarthX Battery Box Retainer Clip	KPES0058	2
5.	3/32" Aluminum Rivet	40APR1/8	4
6.	3/16" Nut Plate	K-1000-3	2
7.	3/8" x 058" x 1/2" Aluminum Bushing **	KAAC0044-3	1
8.	3/16" Thick Washer	AN960-10	2
9.	3/16" Bolt	AN3-3A	2
10.	3/16" Thin Washer	AN960-10L	4
11.	3/16" Bolt	AN3-10A	4
12.	1/8" Stainless Steel Rivet - Cherry Q	CCPQ-42	2
13.	3/16" Large Area Washer	AN970-3	4
14.	3/16" Shear Nut	AN364-1032A	4

* May be purchased seperately, call RANS Parts Dept. for pricing
** Builder fabricates from raw stock

09/11/2018

011A-09 / 915iS

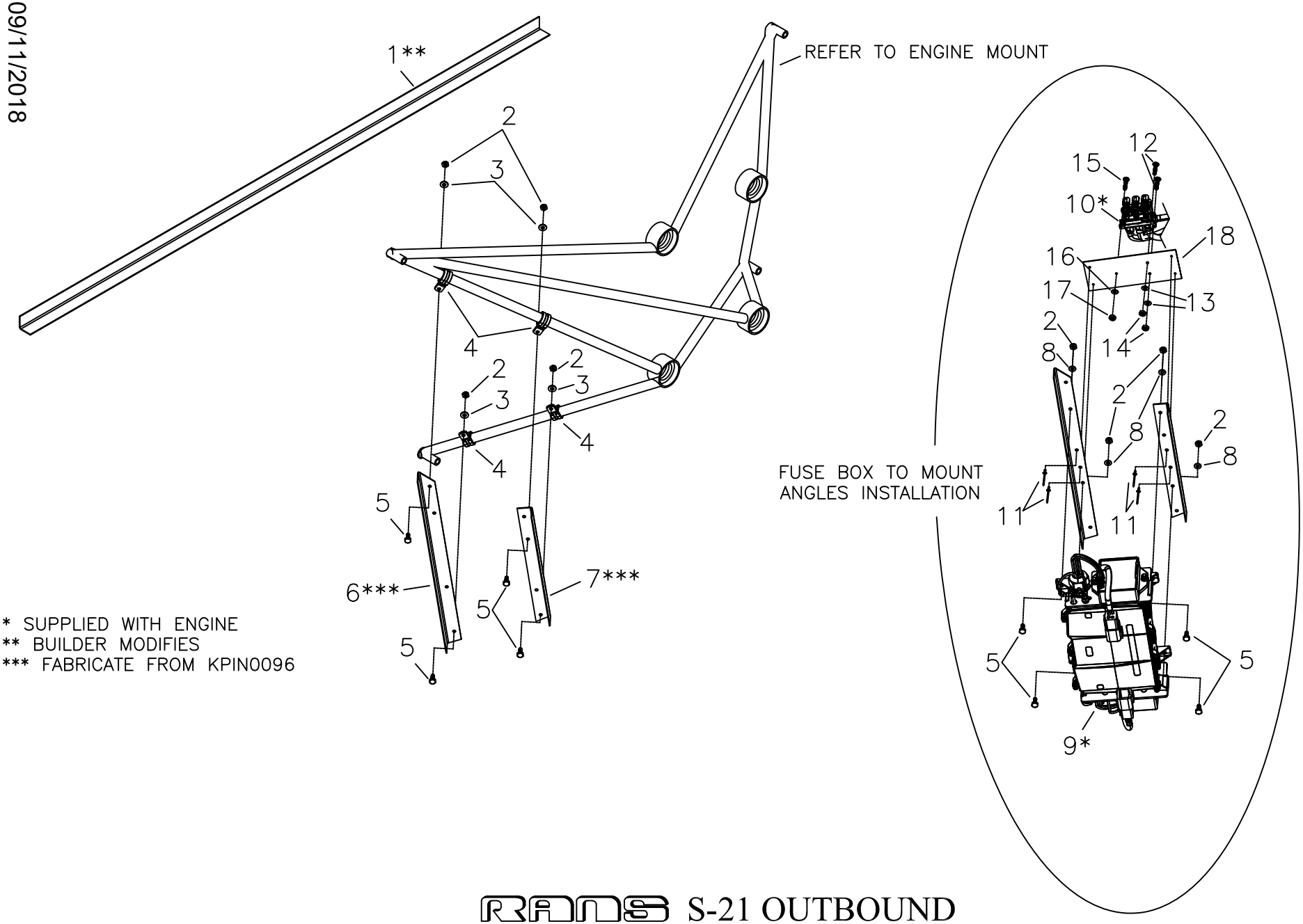

* SUPPLIED WITH ENGINE
** BUILDER MODIFIES
*** FABRICATE FROM KPIN0096

RANS S-21 OUTBOUND
ROTAX 915iS
FUSE BOX AND PCV INSTALLATION

MD5657
REV. – ORIG

RANS S-21 OUTBOUND

ROTAX 915iS - FUSE BOX AND PCV INSTALLATION

#	DESCRIPTION	PART NUMBER	QUANTITY
1.	Support Angle - Baggage Compartment**	KPIN0096	1
2.	3/16" Shear Nut	AN364-1032A	8
3.	3/16" Thick Washer	AN960-10	4
4.	5/8" Cushion Clamp	MS21919-DG10	4
5.	3/16" Bolt	AN3-4A	8
6.	Fuse Box Mount Angle - AFT***	KPIN0096	0
7.	Fuse Box Mount Angle - FWD***	KPIN0096	0
8.	3/16" Thin Washer	AN960-10L	4
9.	Fuse Box - ROTAX 915iS*	-----	0
10.	Pressure Control Valve *	-----	0
11.	1/8" Aluminum Rivet - Cherry Q	AAPQ-42	4
12.	#8 Pan Head Machine Screw	MS27039-0809	2
13.	#8 Washer	AN960-8	2
14.	#8 Shear Nut	AN364-832A	2
15.	#4 Pan Head Machine Screw	MS35206-218	1
16.	#4 Brass Washer	AN960-B4	1
17.	#4 Shear Nut	AN364-440A	1
18.	Solenoid (PCV) Mount Plate	KPPW0389	1

*Supplied with Engine
**Builder Modifies
***Fabricate from KPIN0096

9/11/2018
REV. A

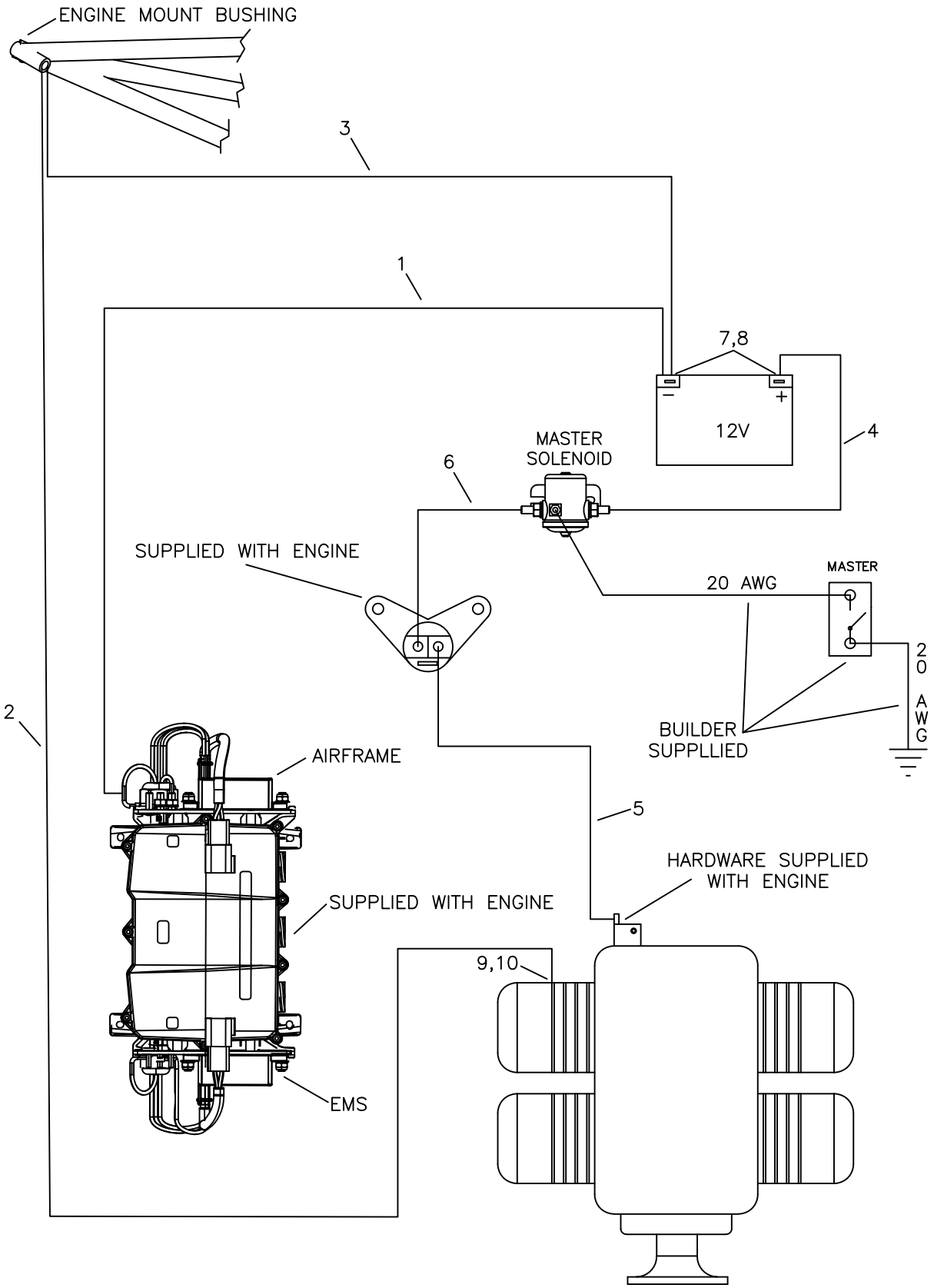

RANS S-21 OUTBOUND

MD5657
REV. – ORIG

ROTAX 915iS
ENGINE ELECTRICAL

RANS S-21 OUTBOUND

ROTAX 915iS - ENGINE ELECTRICAL

#	DESCRIPTION	PART NUMBER	QUANTITY
1.	Fuse Box To Battery Ground	KAES0031	1
2.	Engine Mount To Engine Ground	KAES0032	1
3.	Battery Ground To Engine Mount	KAES0030	1
4.	Battery To Master Solenoid	KAES0034	1
5.	Starter Solenoid To Starter	KAES0033	1
6.	Master Solenoid to Starter Solenoid	KAES0035	1
7.	3/16" Shear Nut - Steel	AN364-1032C	2
8.	3/16" Bolt	AN3-3A	2
9.	6MM Bolt	6MMx16	1
10.	Loc Washer	AN935-416L	1

09/11/2018

011B-01 / 915iS

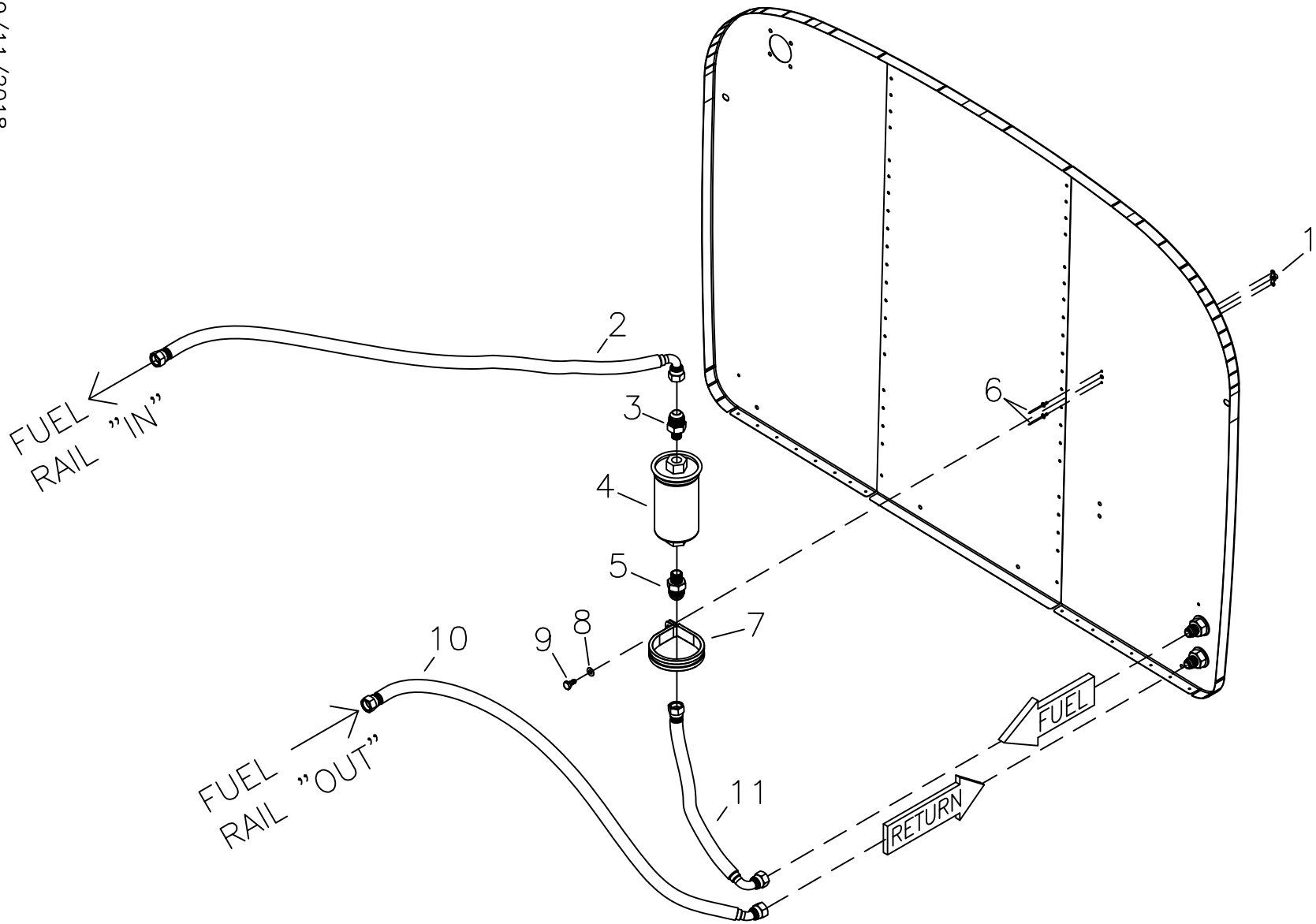

RANS S-21 OUTBOUND
ROTAX 912ULS
FUEL SYSTEM INSTALLATION - FIREWALL FORWARD

MD5657
REV. - ORIG

RANS S-21 OUTBOUND

ROTAX 915iS - FUEL SYSTEM - FIREWALL FORWARD

#	DESCRIPTION	PART NUMBER	QUANTITY
1.	3/16" Nut Plate	K-1000-3	1
2.	Fuel Line - Fuel Filter to Fuel Rail	KSPW0153	1
3.	Straight Fitting, -6AN to 12MM	KSFS0050	1
4.	ROTAX Fuel Filter (874 060)*	-----	0
5.	Straight Fitting, -6AN to 14mm	KSFS0049	1
6.	3/32" Aluminum Rivet	40APR 1/8	2
7.	2-3/16" Cushion Clamp	MS21919-WDG35	1
8.	3/16" Thn Washer	AN960-10L	1
9.	3/16" Bolt	AN3-3A	1
10.	Fuel Line - Fuel Rail to Firewall (Return)	KSPW0154	1
11.	Fuel Line - Firewall to Fuel Filter	KSPW0152	1

*Supplied with Engine

09/11/2018

011B-03 / 915iS

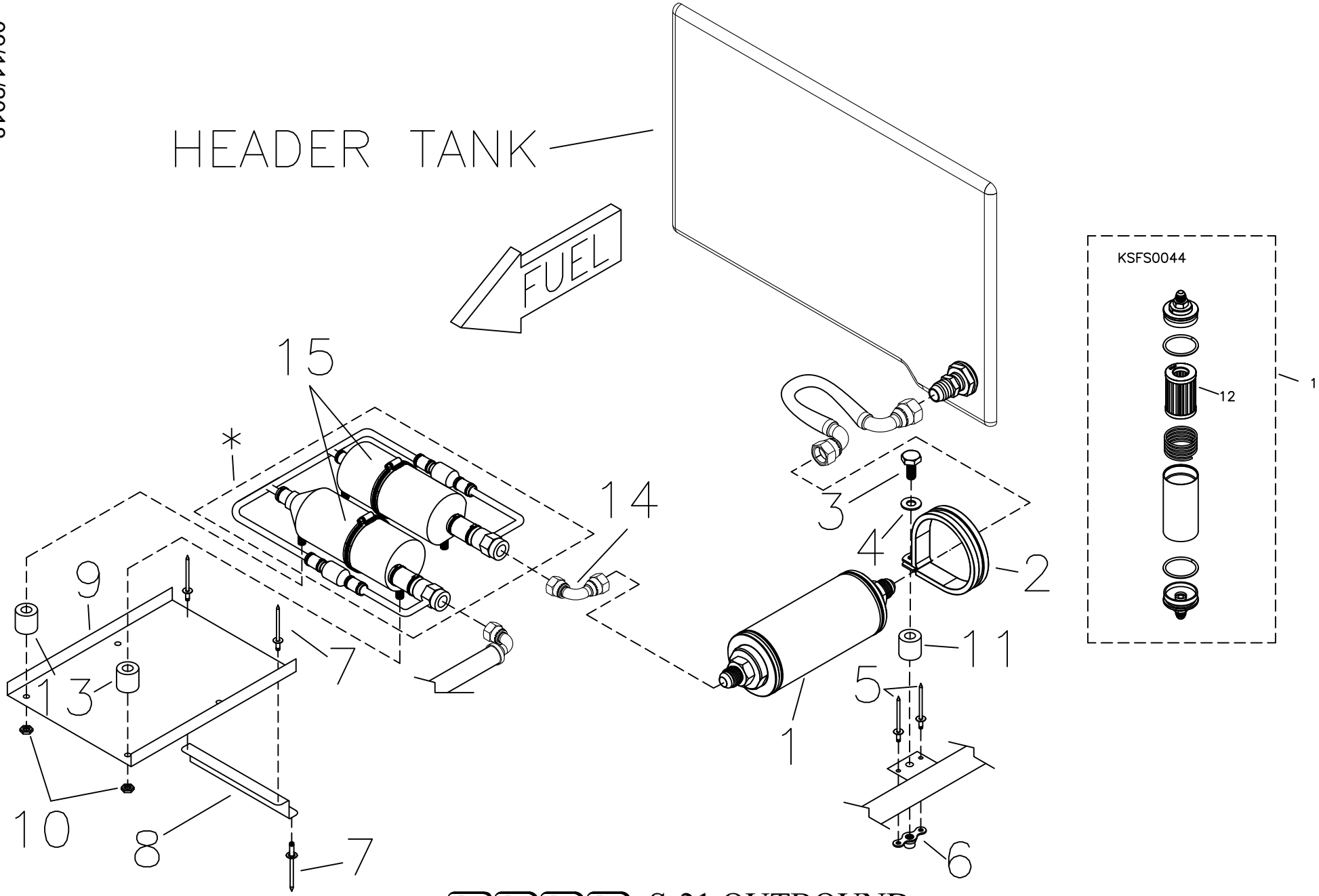

RANS S-21 OUTBOUND
ROTAX 915iS
FUEL PUMP\FILTER INSTALLATION

MD5657
REV. – ORIG

* SUPPLIED WITH ENGINE

RANS S-21 OUTBOUND

ROTAX 915iS - FUEL PUMP/FILTER INSTALLATION

#	DESCRIPTION	PART NUMBER	QUANTITY
1.	6" Fuel Filter Assembly	KSFS0044	1
2.	2" Cushion Clamp	MS21919-WDG32	1
3.	3/16" Bolt	AN3-7A	1
4.	3/16" Thin Washer	AN960-10L	1
5.	3/32" Aluminum Rivet	40APR 1/8	2
6.	3/16" Nut Plate	K-1000-3	1
7.	1/8" Aluminum Rivet **	AAPQ-42	14
8.	Fuel Pump Tray Support **	KPFS0120	2
9.	Fuel Pump Tray **	KPFS0119	2
10.	6MM Loc Nut	KSHW0123	4
11.	3/8" x .095 x .375" Aluminum Bushing*	KPST0132	0
12.	6" Fuel Filter Element (62 Micron)	KSFS0045	1
13.	3/8" x .058" x .250" Aluminum Bushing*	KAAC0044-3	1
14.	Fiiting, 90 Degree Union, -6 AN Female to -6 AN Female	KSFS0052	1
15.	1.625" Hose Clamp - 3/8" Band	KSHW0124	2

*Builder Fabricates from Raw Stock
**Only one each of these parts is used if there will be an autopilot installed

9/11/2018
REV. A

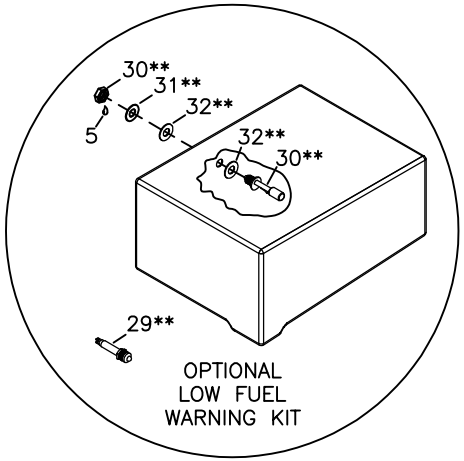

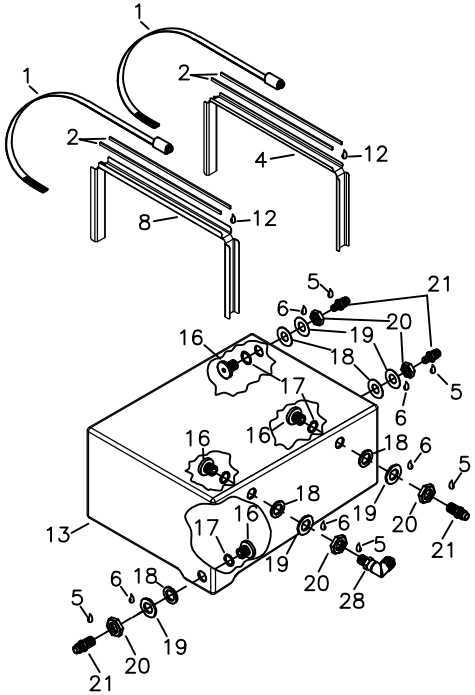

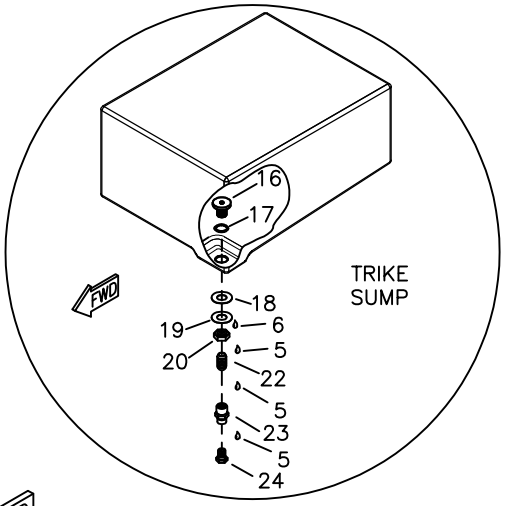

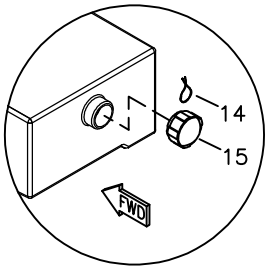

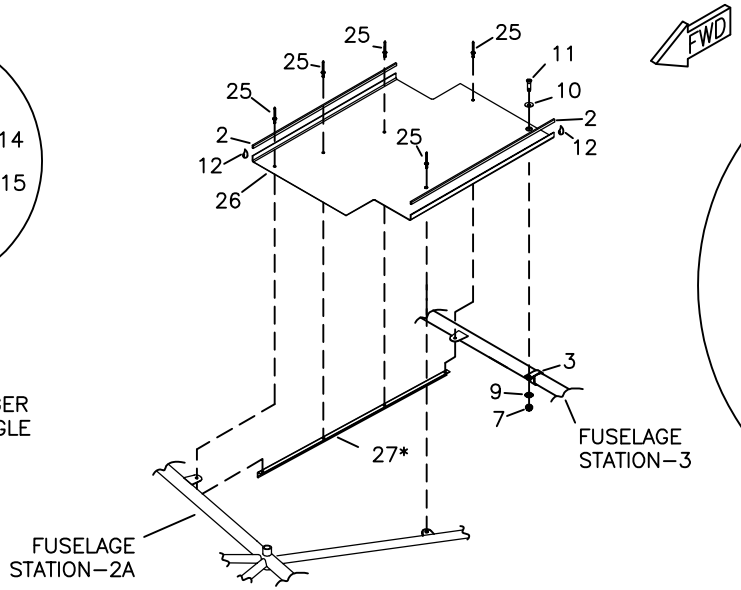

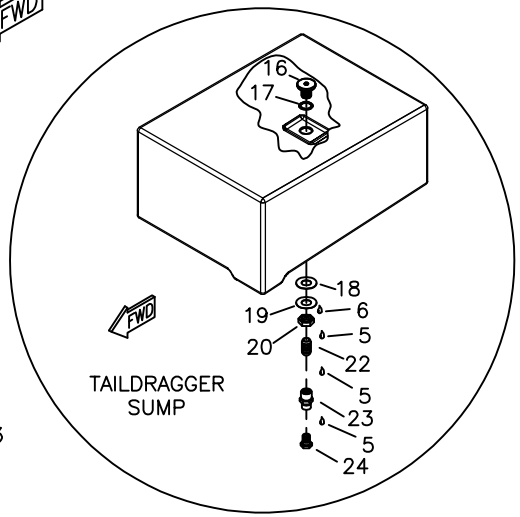

* NOTCH FUSELAGE BOTTOM SKIN STRINGER TO CLEAR HEADER TANK SUPPORT ANGLE

** LOW FUEL WARNING KIT IS OPTIONAL

SOME DUPLICATE HARDWARE NOT SHOWN FOR CLARITY

RANS S-21 OUTBOUIND
ROTAX 915iS
FUEL SYSTEM - HEADER TANK

MD5657
REV. - ORIG

RANS S-21 OUTBOUND

ROTAX 915iS - FUEL SYSTEM - HEADER TANK

#	DESCRIPTION	PART NUMBER	QUANTITY
1.	15" Hose Clamp	KSHW0100	2
2.	Rubber Edging	8510K11	7 ft.
3.	5/8" Plain Clamp	AN742-D10	1
4.	6.9 Gal. Header Tank Mount Channel - Aft	KPFS0110	1
5.	Thread Sealant * (Permatex PTFE Fuel Compatible or DOW 730)	-----	0
6.	Loctite - Blue *	-----	0
7.	3/16" Shear Nut	AN364-1032A	1
8.	6.9 Gal. Header Tank Mount Channel - Fwd	KPFS0111	1
9.	3/16" Thick Washer	AN960-10	1
10.	3/16" Countersunk Washer (100 Degree)	NAS1169-10L	1
11.	3/16" Countersunk Machine Screw (100 Degree)	MS24694-S50	1
12.	Adhesive - Superglue *	-----	0
13.	Header Tank - 6.9 Gal.	KPFS0103	1
14.	Saftey Wire *	-----	0
15.	Fuel Cap	KSFS0007	1
16.	3/4" Bulkhead Fitting	KSFS0037	6
17.	O-Ring - 3/4" Bulkhead	KSFS0039	6
18.	Rubber Washer	KSFS0016	6
19.	3/4" Thick Washer	AN960-1216	6
20.	Nut - 3/4" Bulkhead - Reverse Thread	KSFS0038	6
21.	Nipple - Flared Tube & Pipe Thread	AN816-6D	4
22.	Close Nipple	KSFS0021	1
23.	Reducer	KSFS0022	1
24.	Flush Valve	KSFS0011	1
25.	1/8" Stainless Steel Rivet - Cherry Q	CCPQ-42	5
26.	6.9 Gal Header Tank Mount	KPFS0109	1
27.	Header Tank Mount Angle	KPFU0758	1
28.	Nipple - Flared Tube & Pipe Thread - 90 Degree Swivel	KSFS0051	1
29.	Red LED Indicator Light, 12V **	KSES0071	1
30.	Low Fuel Warning Switch **	KSES0072	1
31.	5/8" Thick Washer (AN960-1016) **	TW-5/8-W	1
32.	5/8" Rubber Washer **	KSFS0040	2

*Builder Supplied
** KAFS0003 - Low Fuel Warning Kit is Optional

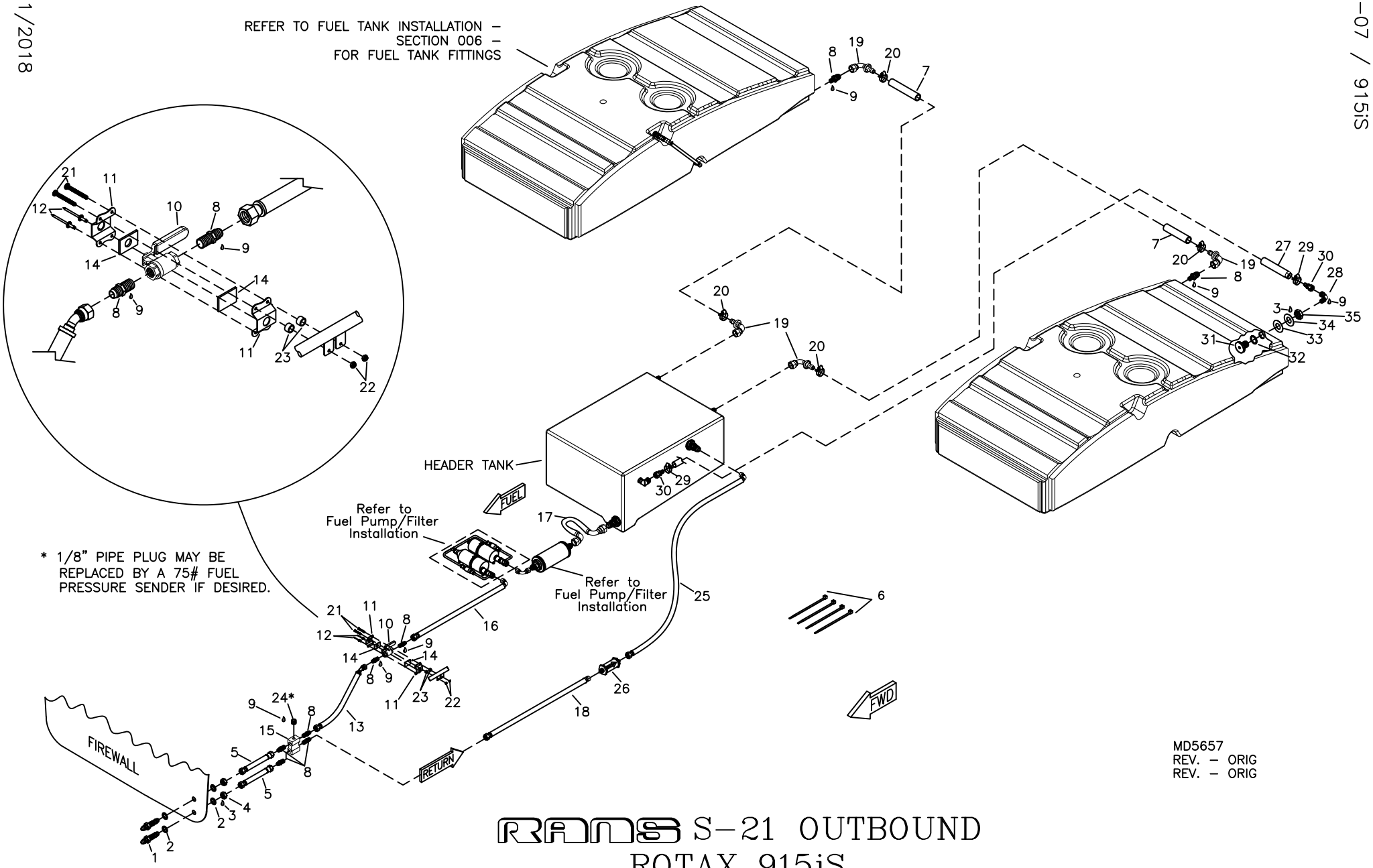

RANS S-21 OUTBOUND
ROTAX 915iS
FUEL SYSTEM – FUSELAGE

RANS S-21 OUTBOUND

ROTAX 915iS - FUEL SYSTEM - Fuselage

#	DESCRIPTION	PART NUMBER	QUANTITY
1.	Union - Flared Tube - Bulkhead	AN832-6D	2
2.	9/16" Thick Washer	AN960-916	4
3.	Loctite Blue *	-----	0
4.	Nut - Flared Tube Bulkhead	AN924-6D	2
5.	Fuel Line Assembly - By-pass Block to Firewall	KSPW0150	2
6.	Plastic Tie - 7.5"	N-Ties	8
7.	Black Fuel Line - 3/8"	27004	13 ft.
8.	Nipple - Flared Tube & Pipe Thread	AN816-6D	8
9.	Thread Sealant *	-----	0
10.	Fuel Valve	KSFS0018	1
11.	Fuel Valve Mount Bracket	KPFS0037	2
12.	1/8" Aluminum Rivet - Cherry Q	AAPQ-42	2
13.	Fuel Line Assembly - Shut-off valve to By-pass Block	KSPW0149	1
14.	Fuel Valve Silicone Pad **	KPFS0106	1
15.	Fuel Block	KSFS0042	1
16.	Fuel Line Assembly - Fuel Pump to Shut-off Valve	KSPW0148	1
17.	Fuel Line Assembly - Header Tank to Fuel Pump	KSPW0147	1
18.	Fuel Line Assembly - By-Pass Block to Check Valve	KSPW0151	1
19.	90 Degree 3/8" Hose Fitting	33982-6-6	4
20.	Hose Clamp - 7/8"	5-6203	4
21.	Brass Bolt	MS35214-20	2
22.	#4-40 Nut	AN364-440A	2
23.	Aluminum Bushing, 1/4" x .028 x .160" **	KAAC0044-2	0
24.	1/8" Pipe Plug ***	PIPE-PLUG 1/8	1
25.	Fuel Line Assembly - Check Valve to Header Tank	KSPW0155	1
26.	Check Valve	KSFS0036	1
27.	Black Fuel Line - 1/2"	KSFS0048	6 ft.
28.	Nipple - Flared Tube & Pipe Thread - Swivel	KSFS0051	1
29.	Hose Clamp - 1"	5-5210	2
30.	Straight Hose Fitting - 1/2"	KSPW0026	2
31.	3/4" Bulkhead Fitting	KSFS0037	1
32.	O-Ring - 3/4" Bulkhead	KSFS0039	1
33.	Rubber Washer	KSFS0016	1
34.	3/4" Thick Washer	AN960-1216	1
35.	Nut - 3/4" Bulkhead - Reverse Thread	KSFS0038	1

*Builder Supplied
**Builder Modifies

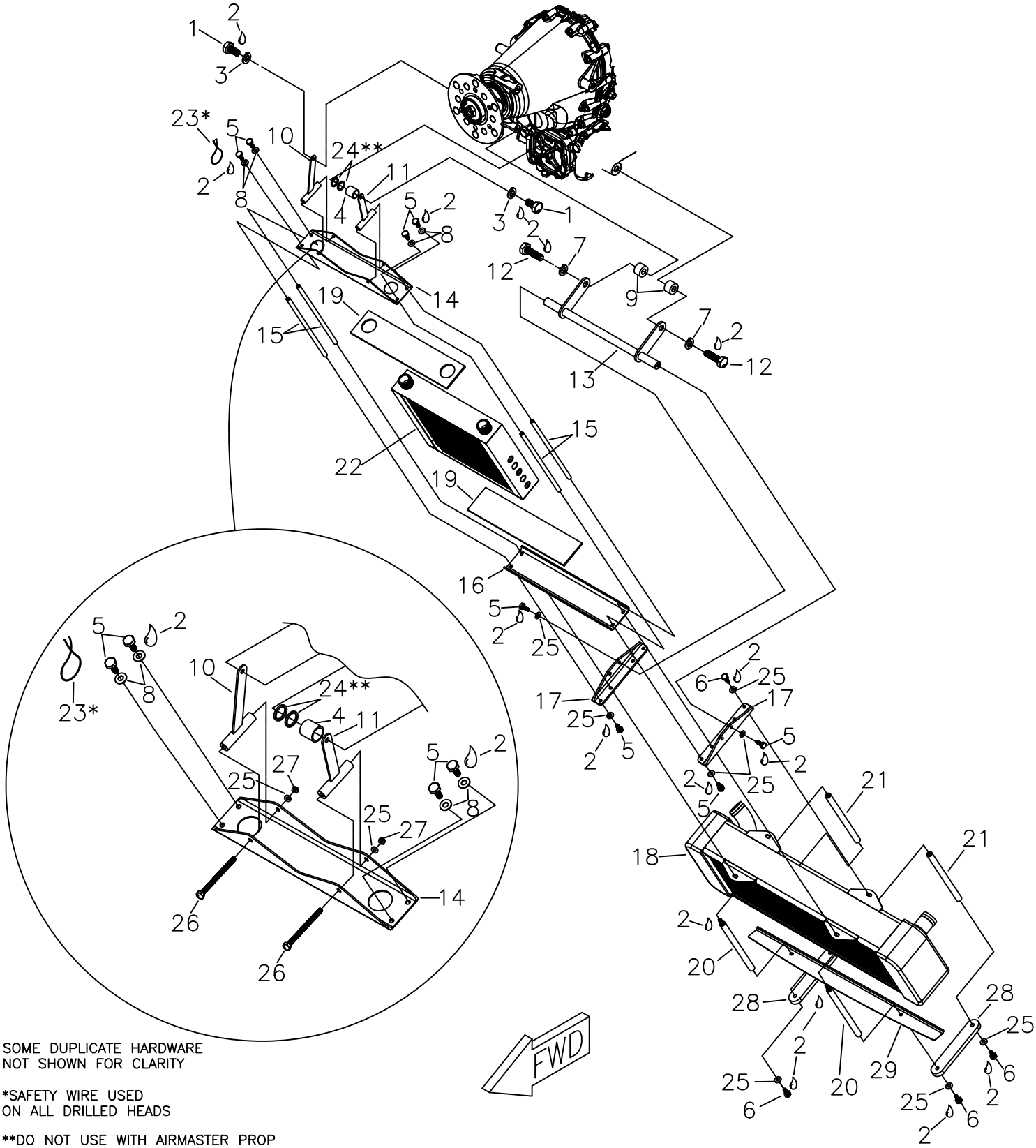

SOME DUPLICATE HARDWARE
NOT SHOWN FOR CLARITY

*SAFETY WIRE USED
ON ALL DRILLED HEADS

**DO NOT USE WITH AIRMASTER PROP

RANS S-21 OUTBOUND
ROTAX 915iS
OIL COOLER & RADIATOR MOUNT INSTALLATION

MD5657
REV. – ORIG

09/11/2018

RANS S-21 OUTBOUND

ROTAX 915iS - OIL COOLER & RADIATOR MOUNT INSTALLATION

#	DESCRIPTION	PART NUMBER	QUANTITY
1.	8mm Bolt	8MM x 20	2
2.	Loctite Blue *	-----	0
3.	5/16 Loc-Washer	AN935-516	2
4.	Spacer Bushing	KPAC0279	1
5.	3/16" Drilled Head Bolt	AN3H-4A	8
6.	3/16" Drilled Head Bolt	AN3H-5A	6
7.	10mm Loc-Washer	945-753	2
8.	3/16" Thick Washer	AN960-10	4
9.	Spacer	KPPW0304	2
10.	Oil Cooler Mount - RH	KPPW0358	1
11.	Oil Cooler Mount - LH	KPPW0393	1
12.	10mm Bolt	10MM x 35MM BOLT	2
13.	Radiator Mount - Weldment	KPPW0369	1
14.	Upper Mount Plate - Oil Cooler	KPPW0345	1
15.	Oil Cooler Bushing	KPPW0385	4
16.	Lower Mount Plate - Oil Cooler	KPPW0346	1
17.	Upper Radiator Mount Angle	KPPW0359	2
18.	Radiator - Rotax 915iS	KPPW0355	1
19.	.093" Silicone Sheet **	KPPW0254	2
20.	Radiator Mount Tube - FWD	KPPW0386	2
21.	Radiator Mount Tube - AFT	KPPW0387	2
22.	Oil Cooler - Rotax 915iS (Supplied with engine)	KSPW0124	1
23.	Saftey Wire *	-----	0
24.	5/16" Thick Washer ***	AN960-516	2
25.	3/16" Thin Washer	AN960-10L	12
26.	3/16" Bolt	AN3-22A	2
27.	3/16" Shear Nut	AN364-1032A	2
28.	Radiator Lower Mount Strap	KPPW0394	2
29.	Radiator Air Deflector	KPPW0395	1

*Builder Supplied
**Builder Modifies
***Do Not Use With Airmaster Prop

09/11/2018

011C-03 / 915iS

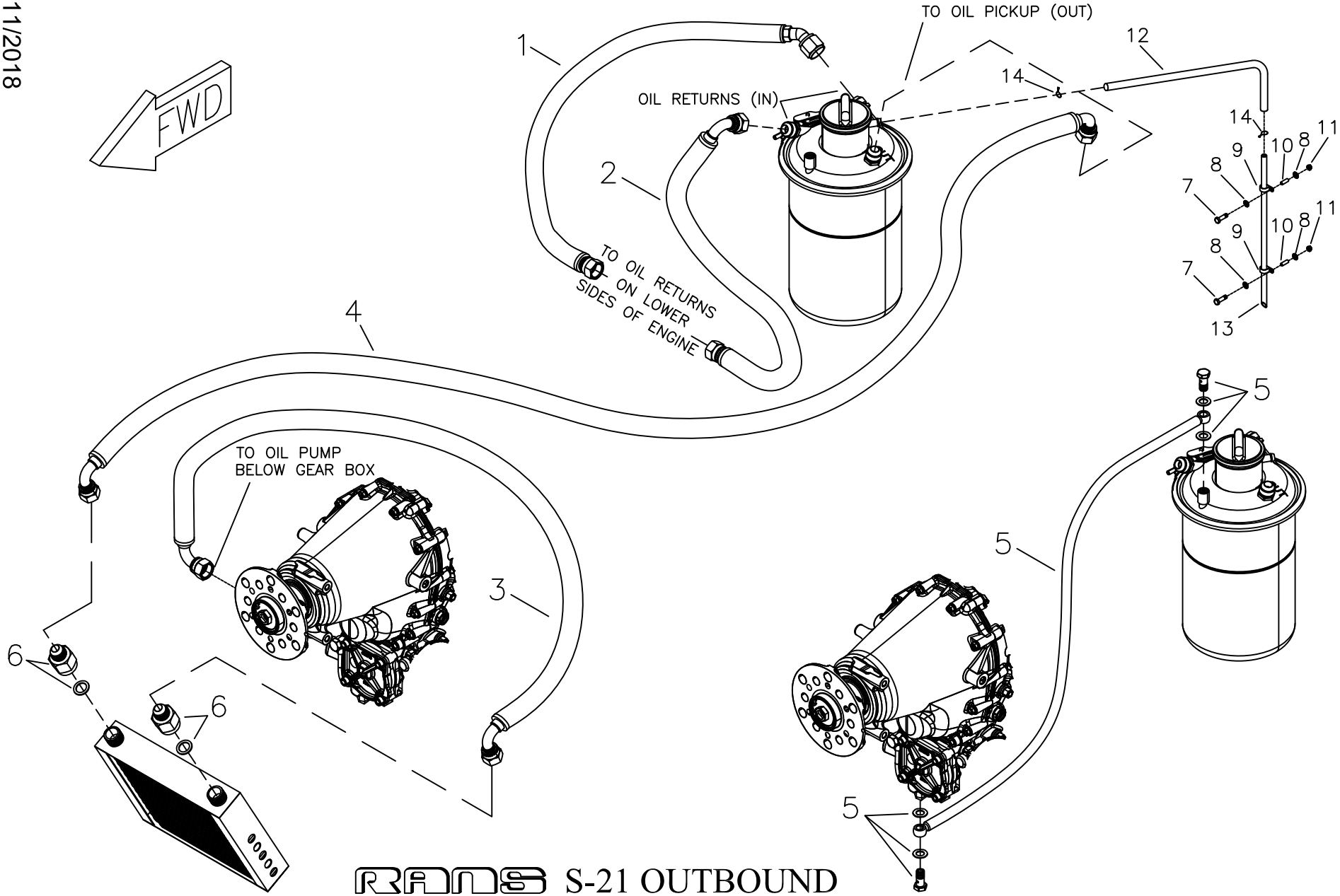

RANS S-21 OUTBOUND
ROTAX 915iS
LUBRICATION SYSTEM INSTALLATION

MD5657
REV. – ORIG

RANS S-21 OUTBOUND

ROTAX 915iS - LUBRICATION SYSTEM INSTALLATION

#	DESCRIPTION	PART NUMBER	QUANTITY
1.	Oil Line Assembly - Return RH	KSPW0125	1
2.	Oil Line Assembly - Return LH	KSPW0126	1
3.	Oil Line Assembly - Cooler to Pump	KSPW0127	1
4.	Oil Line Assembly - Tank to Cooler	KSPW0128	1
5.	Oil Line Assembly - Return - Pump to Tank	KSPW0129	1
6.	Oil Cooler Adaptor w/ Gasket Ring *	KSPW0156	0
7.	3/16" Bolt	AN3-11A	2
8.	3/16" Thin Washer	AN960-10L	4
9.	3/8" Plain Clamp	AN742-D6	2
10.	3/8" x .095" x 3/4" Aluminum Bushing **	KPST0132	0
11.	3/16" Shear Nut	AN364-1032A	2
12.	Medium Temperature Tubing	KSPW0069	3ft
13.	3/8" x .035" Aluminum Tube **	KAAC0044-14	1
14.	Saftey Wire ***	-----	0

*Supplied with Oil Cooler (KSPW0124)
**Builder Modifies
***Builder Supplied

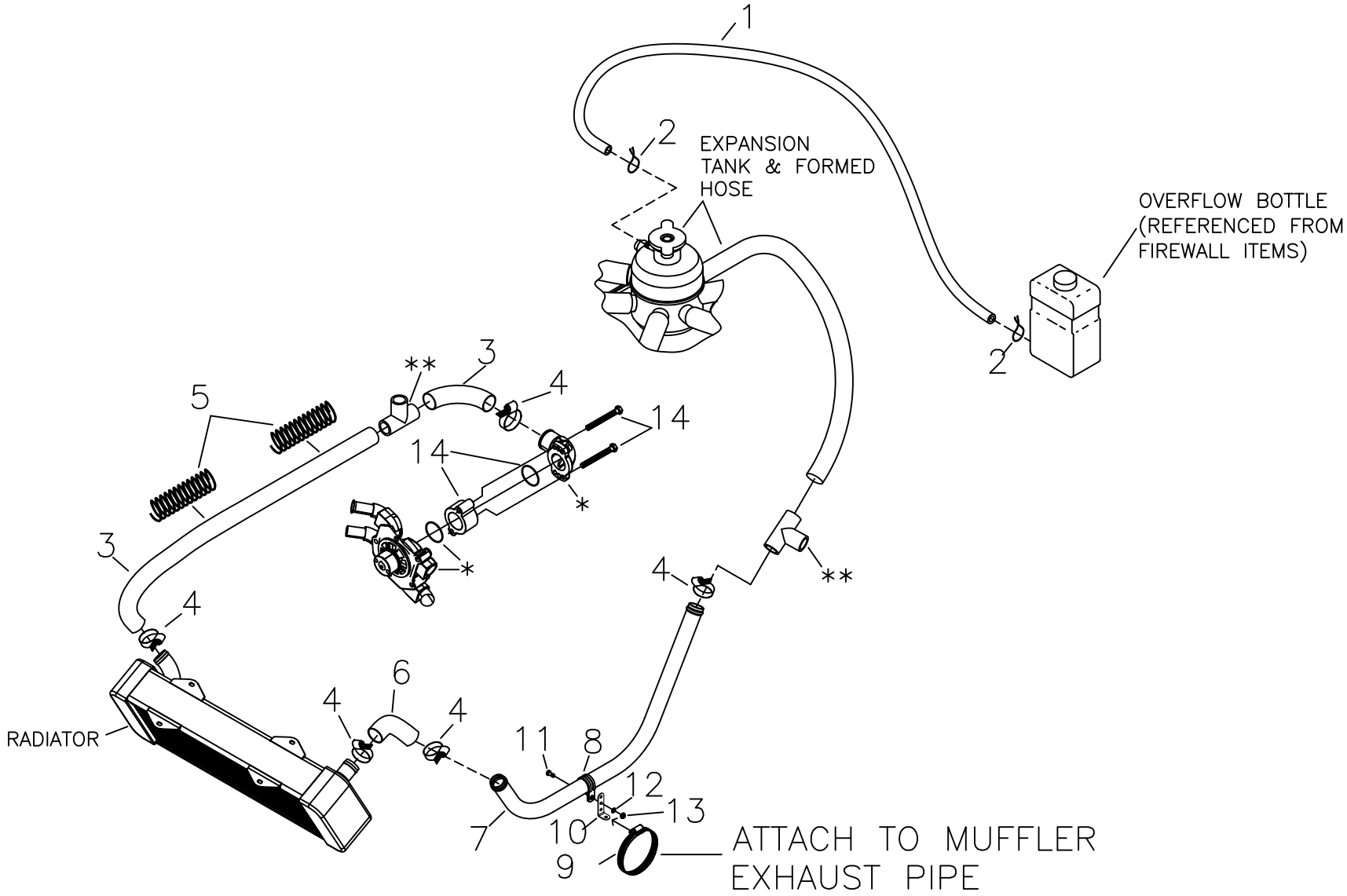

* SUPPLIED WITH ENGINE
** REFER TO CABIN HEATER INSTALLATION

RANS S-21 OUTBOUND
ROTAX 915iS
COOLING SYSTEM INSTALLATION

MD5657
REV. – ORIG

RANS S-21 OUTBOUND

ROTAX 915iS - Coolant System Installation

#	DESCRIPTION	PART NUMBER	QUANTITY
1.	5/16" Overflow Hose	EGCS-OFH	4 ft.
2.	Saftey Wire *	-----	0
3.	Radiator Hose - 1" **	RADIATOR HOSE	3 ft.
4.	35mm Constant Tension Hose Clamp	KSHW0125	5
5.	Coolant Spring	EGCS-HS	2
6.	Pre-formed 90 Degree Radiator Hose **	KSPW0167	1
7.	Radiator Coolant Tube	KPPW0371	1
8.	1" Cushion Clamp - High Temp	MS21919-WCJ16	1
9.	Hose Clamp - 2 1/2"	5-5232	1
10.	Angle Bracket **	KPAC0004	1
11.	3/16" Bolt	AN3-3A	1
12.	3/16" Thin Washer	AN960-10L	1
13.	3/16" Shear Nut	AN364-1032A	1
14.	Coolant Elbow Spacer Kit	KSPW0164	1

*Builder Supplied
**Builder Modifies

09/11/2018

011C-07 / 915iS

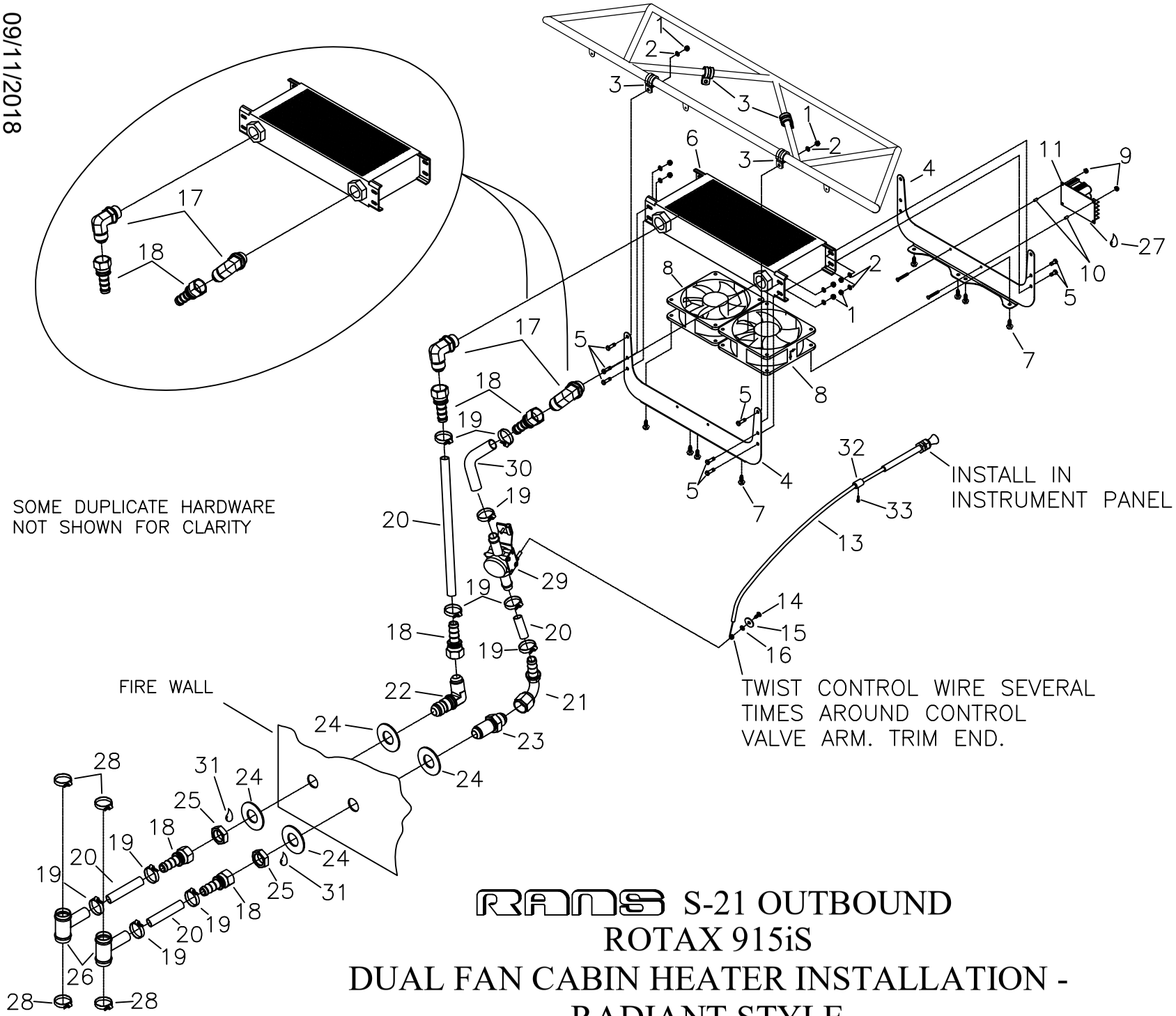

RANS S-21 OUTBOUND
ROTAX 915iS
DUAL FAN CABIN HEATER INSTALLATION - RADIANT STYLE

MD5657
REV. – ORIG

RANS S-21 OUTBOUND

ROTAX 915iS - DUAL FAN CABIN HEATER INSTALLATION

#	DESCRIPTION	PART NUMBER	QUANTITY
1.	3/16" Shear Nut	AN364-1032A	16
2.	3/16" Thin Washer	AN960-10L	16
3.	1/2" Cushion Clamp	MS21919-DG8	4
4.	Dual Fan Heater Mount	KPIN0144	2
5.	3/16" Bolts	AN3-3A	12
6.	Heater Core - 16 row x 13"	KSPW0118	1
7.	#10 Hex Head Thread Cutting Screw	KSHW0122	8
8.	Heater Fan - 120mm x 38 mm	KSIN0006	2
9.	#4-40 Nut	AN364-440A	2
10.	Aluminum Bushing, 1/4" x .028" x 1/4" *	KAAC0044-2	0
11.	Fan Speed Controller and Switch	KSIN0007	1
12.	Brass Bolt	MS35214-20	2
13.	Control Cable	4-336	1
14.	#6 Pan Head Screw	6R x 1/2 PHS	1
15.	#10 Washer - Stainless Steel	BSHW0022	1
16.	1/8" Brass Washer	AN960-B4	1
17.	90 Degree Swivel Fitting (-10 to -10AN O-Ring)	KSPW0120	2
18.	Straight Swivel Fitting (-10 to 5/8" Hose)	KSPW0121	5
19.	25mm Constant Tension Hose Clamp	KSHW0126	10
20.	5/8" Heater Hose	HEATER HOSE 5/8	6 ft.
21.	90 Degree Swivel Fitting (-10 to 5/8" Hose)	KSPW0163	1
22.	Bulkhead - 90 Degree Elbow - Flare	AN833-10D	1
23.	Union - Flared Tube - Bulkhead	AN832-10D	1
24.	7/8 Bulkhead Washer	KSPW0119	4
25.	Nut - Bulkhead	AN924-10D	2
26.	1" to 5/8" Tee	H-Tee	2
27.	RTV Silicone	-----	0
28.	35mm Constant Tension Hose Clamp	KSHW0125	4
29.	Control Valve	277813	1
30.	Preformed Radiator Hose - 5/8" ***	KSPW0025	1
31.	Loctite **	-----	0
32.	Cable Friction Block	T-STOP	1
33.	Socket Head Cap Screw	T-SC	1

*Fabricate from Raw Stock
**Builder Supplied
***Builder Modified

9/11/2018
REV. A

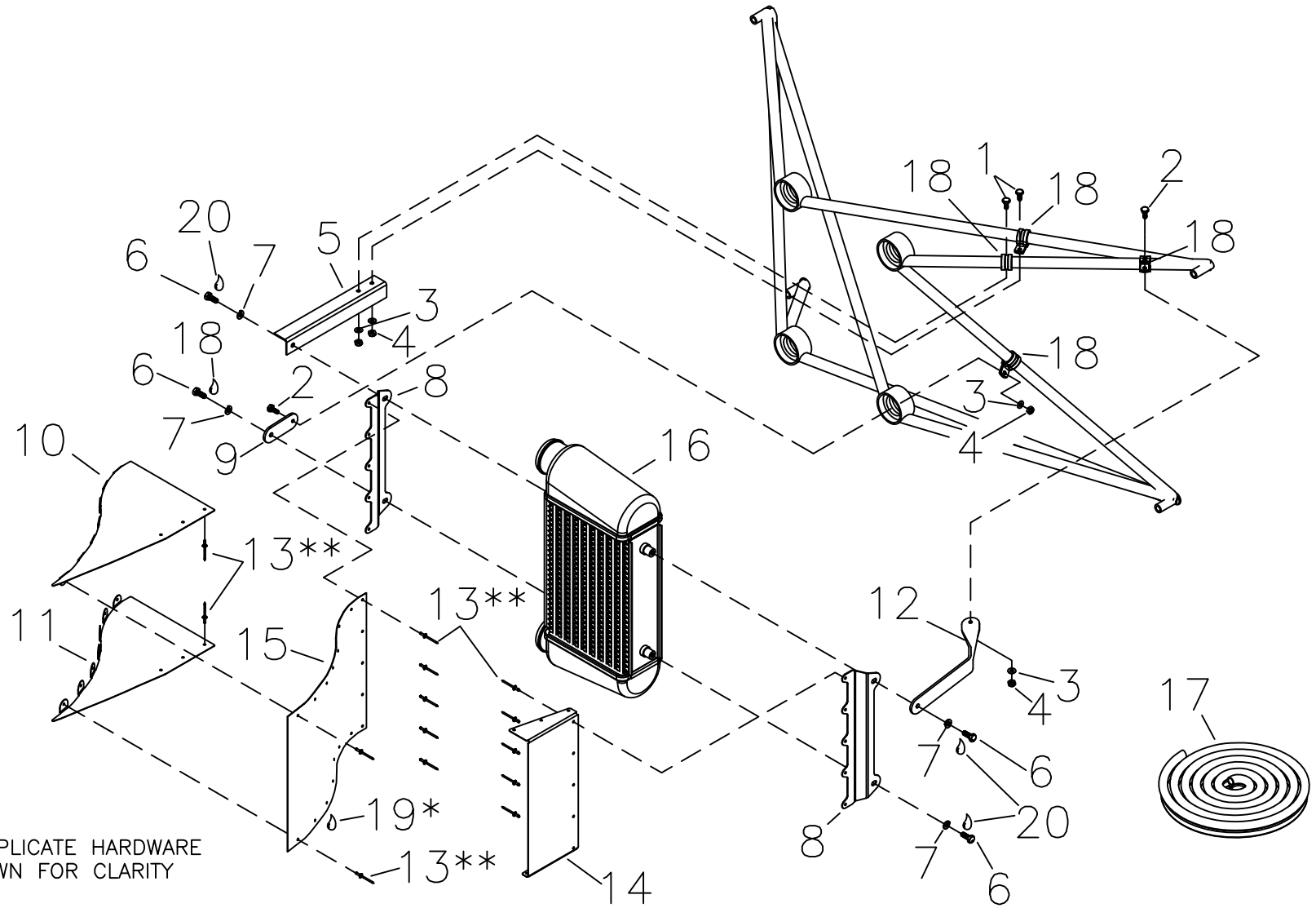

SOME DUPLICATE HARDWARE
NOT SHOWN FOR CLARITY

*SEAL INSIDE AND AROUND SCOOP
WITH SILICONE SEAL

**ALL RIVETS INSTALL
FROM INSIDE SCOOP

RANS S-21 OUTBOUND
ROTAX 915iS
INTERCOOLER INSTALLATION

MD5657
REV. – ORIG

RANS S-21 OUTBOUND

ROTAX 915iS - INTERCOOLER INSTALLATION

#	DESCRIPTION	PART NUMBER	QUANTITY
1.	3/16" Bolt	AN3-3A	2
2.	3/16" Bolt	AN3-4A	2
3.	3/16" Thin Washer	AN960-10L	4
4.	3/16" Shear Nut	AN364-1032A	4
5.	Support Angle *	KPIN0096	1
6.	6mm Bolt	M6x16 BOLT	4
7.	1/4" Loc Washer	AN935-416L	4
8.	Intercooler Air Scoop Attach Bracket	KPPW0368	2
9.	Intercooler Lower Mount Strap	KPPW0356	1
10.	Intercooler Air Scoop Top Cover	KPPW0365-T	1
11.	Intercooler Air Scoop Bottom Cover	KPPW0365-B	1
12.	Intercooler Upper Mount Strap *	KPPW0357	1
13.	1/8" Aluminum Rivet - Avex	1691-0410	30
14.	Intercooler Air Scoop Outboard	KPPW0366	1
15.	Intercooler Air Scoop Inboard	KPPW0367	1
16.	Intercooler - Rotax 915iS (Supplied w/ Engine)	KSPW0162	1
17.	Trimlock Cushion Lip *	4100C-1/16	3 ft.
18.	5/8" Cushion Clamp	MS21919-WDG10	4
19.	RTV High Temp Silicone **	-----	0
20.	Loctite Blue **	-----	0

*Builder Modifies
**Builder Supplied

09/11/2018

011C-11 / 915iS

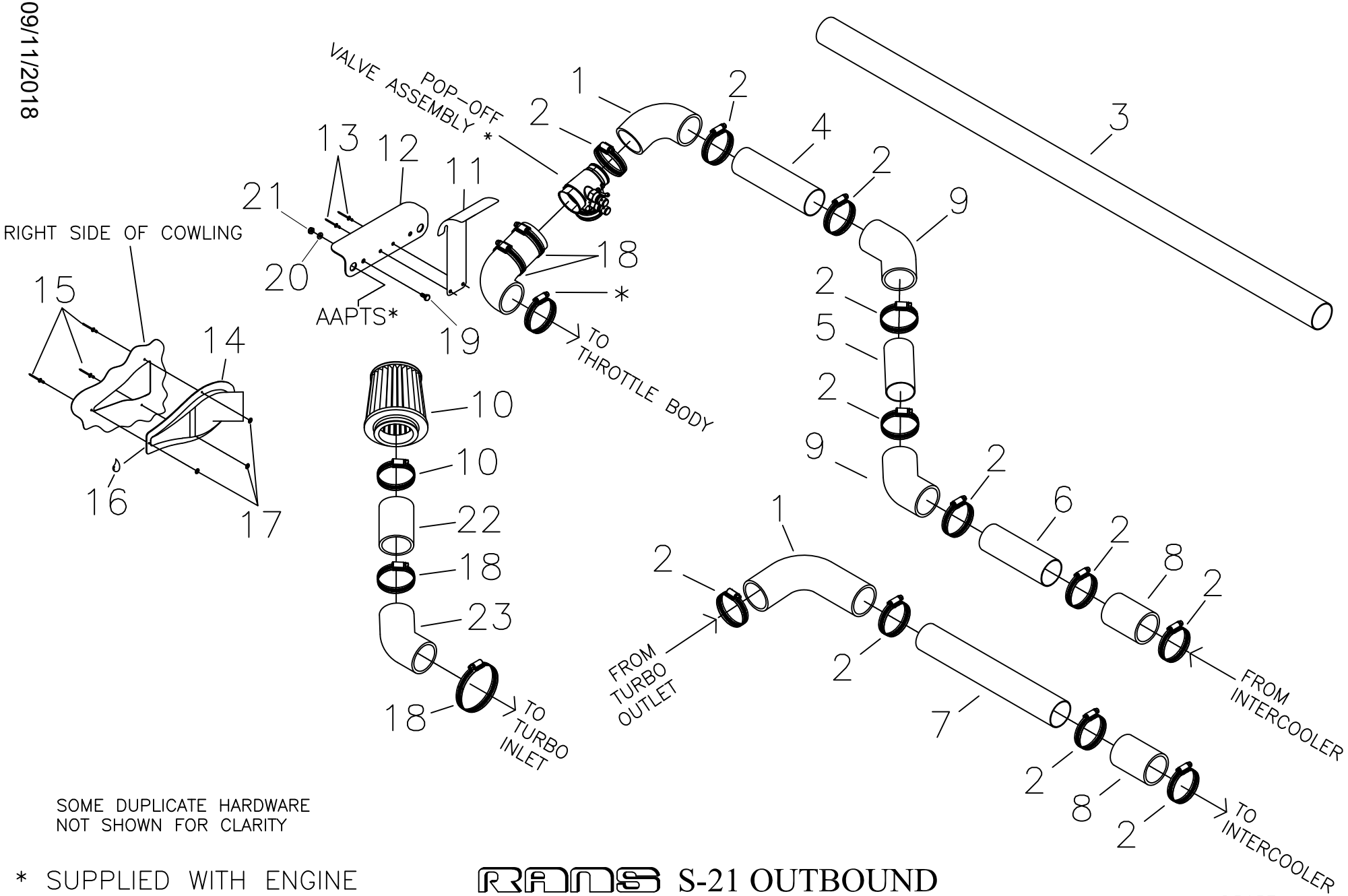

SOME DUPLICATE HARDWARE
NOT SHOWN FOR CLARITY

* SUPPLIED WITH ENGINE

RANS S-21 OUTBOUND
ROTAX 915iS
INDUCTION SYSTEM INSTALLATION

MD5657
REV. – ORIG

RANS S-21 OUTBOUND

ROTAX 915iS - INDUCTION SYSTEM INSTALLATION

#	DESCRIPTION	PART NUMBER	QUANTITY
1.	2" ID Silicone Hose - 90 Degree	KSPW0159	2
2.	Hose Clamp - 2 1/2"	5-5232	12
3.	Intercooler Connecting Tube - Raw Stock *	KPPW0363	1
4.	Intercooler Connecting Tube (7 inches) **	KPPW0363 **	0
5.	Intercooler Connecting Tube (4 inches) **	KPPW0363 **	0
6.	Intercooler Connecting Tube (6 inches) **	KPPW0363 **	0
7.	Intercooler Connecting Tube (13 inches) **	KPPW0363 **	0
8.	2" ID Silicone Hose - Splice ***	KSPW0159 ***	0
9.	2" ID Silicone Hose - 45 Degree	KSPW0160	2
10.	Air Filter - Rotax 915iS - (with hose clamp)	KSPW0158	1
11.	AAPTS Mount Bracket	KPPW0390	1
12.	AAPTS Mount Bracket Angle	KPPW0388	1
13.	3/16" Aluminum Rivet - Cherry Q	AAPQ-62	2
14.	Air Vent NACA Scoop	KSFU0004	1
15.	1/8" Aluminum Rivet - Avex	1691-0410	3
16.	RTV High Temp Silicone ****	-----	0
17.	1/8" Brass Washer	AN960-B4	3
18.	Hose Clamp - 3 1/2"	5-5248	4
19.	1/4" Bolt	AN4-4A	2
20.	1/4" Thin Washer	AN960-416L	2
21.	1/4" Shear Nut	AN364-428A	2
22.	2.75" Connecting Tube	KPPW0396	1
23.	60 Degree 2.75" Silicone Elbow *	KSPW0166	1

*Builder Modifies
**Fabricate from Raw Stock
***Use drop-off from 90 degree Silicone Hoses
****Builder Supplied

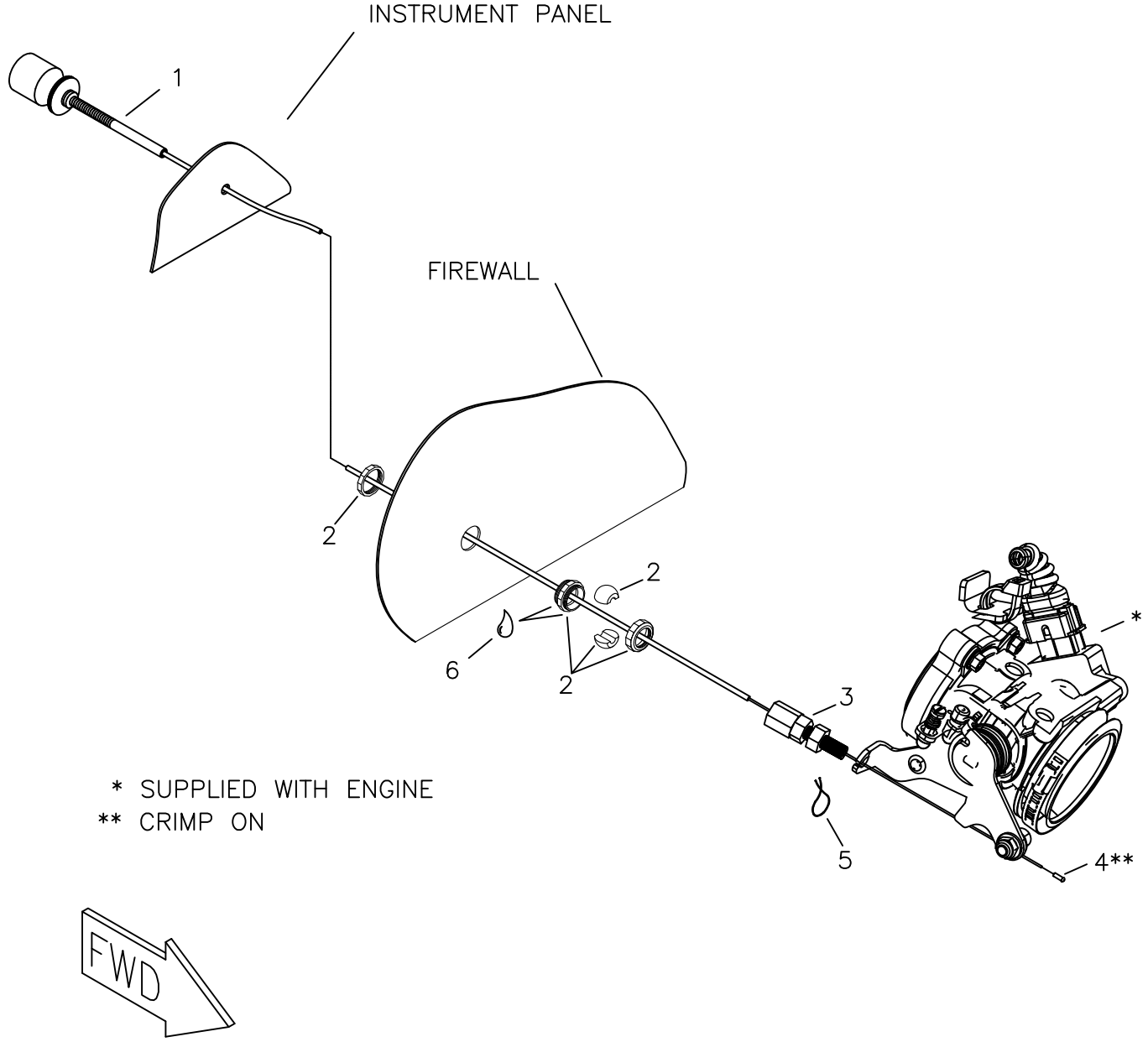

MD5657
REV. ORIG

RANS S-21 OUTBOUND
ROTAX 915is
THROTTLE ASSEMBLY

09/11/2018

RANS S-21 OUTBOUND

ROTAX 915iS - THROTTLE ASSEMBLY

#	DESCRIPTION	PART NUMBER	QUANTITY
1.	Throttle Cable Assembly - Vernier Assist	KSCS0033	1
2.	Eyeball Firewall Fitting	KSHW0118	1
3.	Adjustable Cable Ferrule	2373	1
4.	Cable Crimp End Cap **	BSCP0030	1
5.	Saftey Wire *	-----	0
6.	Loctite - Blue *	-----	0

*Builder Supplied
** Crimp On

09/11/2018

011E-01 / 915iS

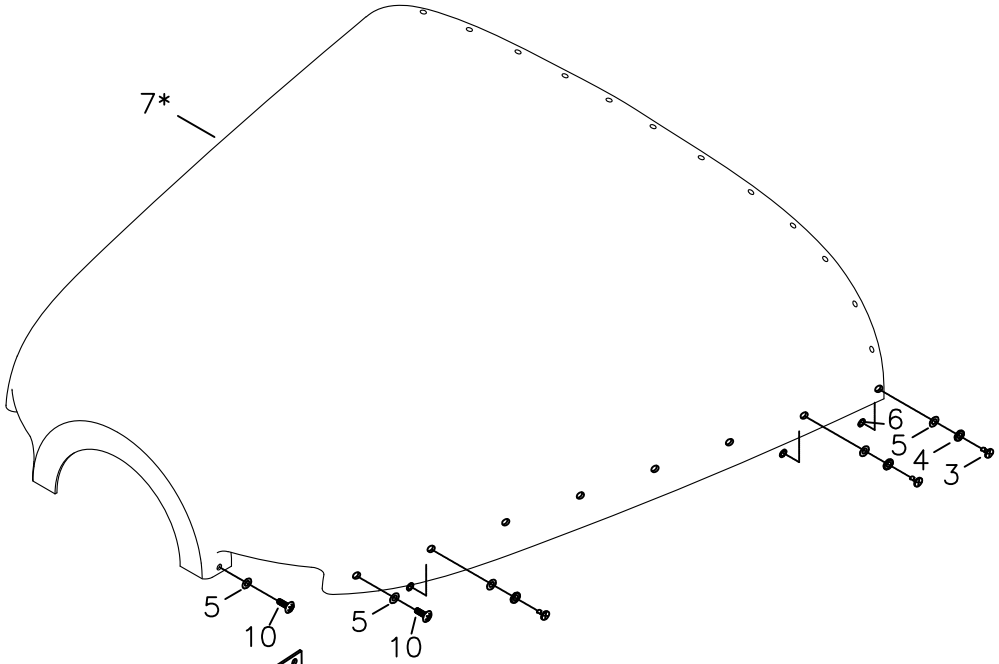

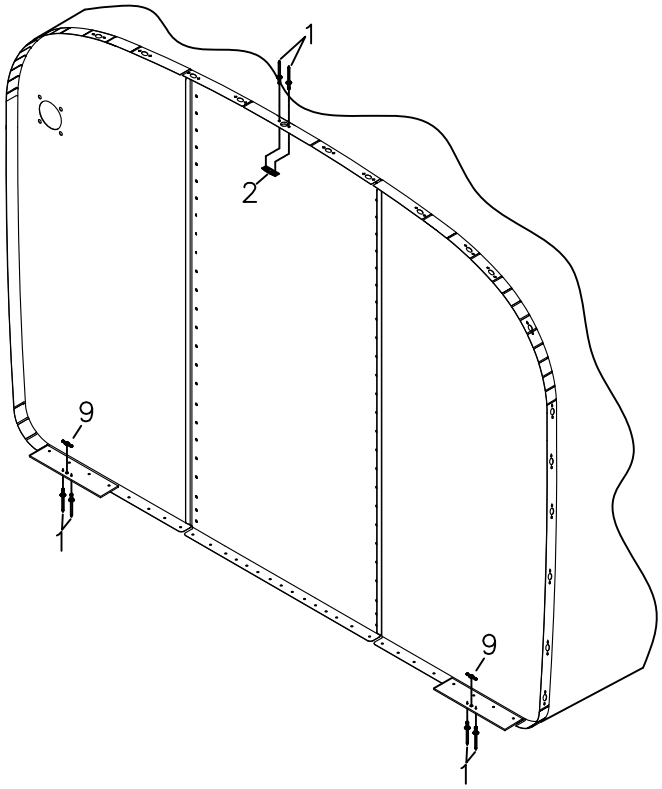

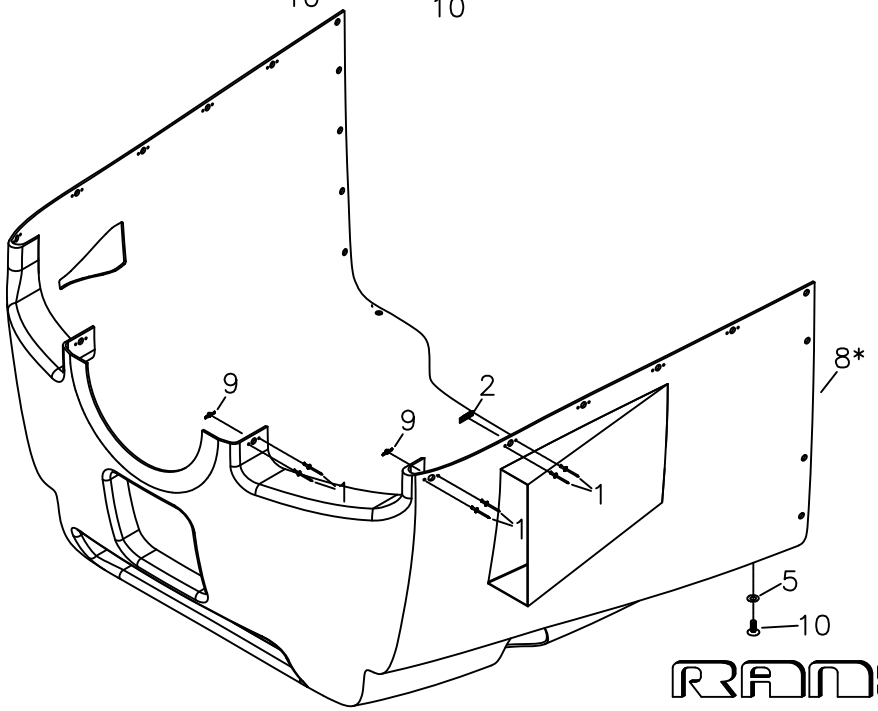

* IMPORTANT:
FITUP AND INSTALLATION OF COWLING REQUIRES BOOT COWL, ENGINE, PROP EXTENSION AND SPINNER BACKING PLATE TO BE INSTALLED.

RANS S-21 OUTBOUND
ROTAX 915iS
COWLING ASSEMBLY AND INSTALLATION

MD5657
REV. – ORIG

RANS S-21 OUTBOUND

ROTAX 915iS - COWLING ASSEMBLY AND INSTALLATION

#	DESCRIPTION	PART NUMBER	QUANTITY
1.	3/32" Aluminum Rivet	40APR1/4	80
2.	1/4 Turn Receptacle	#302	33
3.	1/4 Turn Stud *	#180	33
3.	1/4 Turn Stud *	#200	10
3.	1/4 Turn Stud *	#220	10
3.	1/4 Turn Stud *	#240	2
4.	Rubber Washer **	#201	50
5.	Wear Washer - Nylon	#103	40
6.	Snap Ring	#101	33
7.	Upper Cowling - Rotax 912/915iS	KPCW0054-C	1
8.	Lower Cowling - Rotax 915iS	KPCW0053-C	1
9.	10-32 Nut Plate	K-1000-3	6
10.	10-32 Pan Head Machine Screw	KSHW0071	6

*Use as needed for secure attachment
**Can be stacked in moderation to shim stud for appropriate length

09/11/2018

011E-03 / 915iS

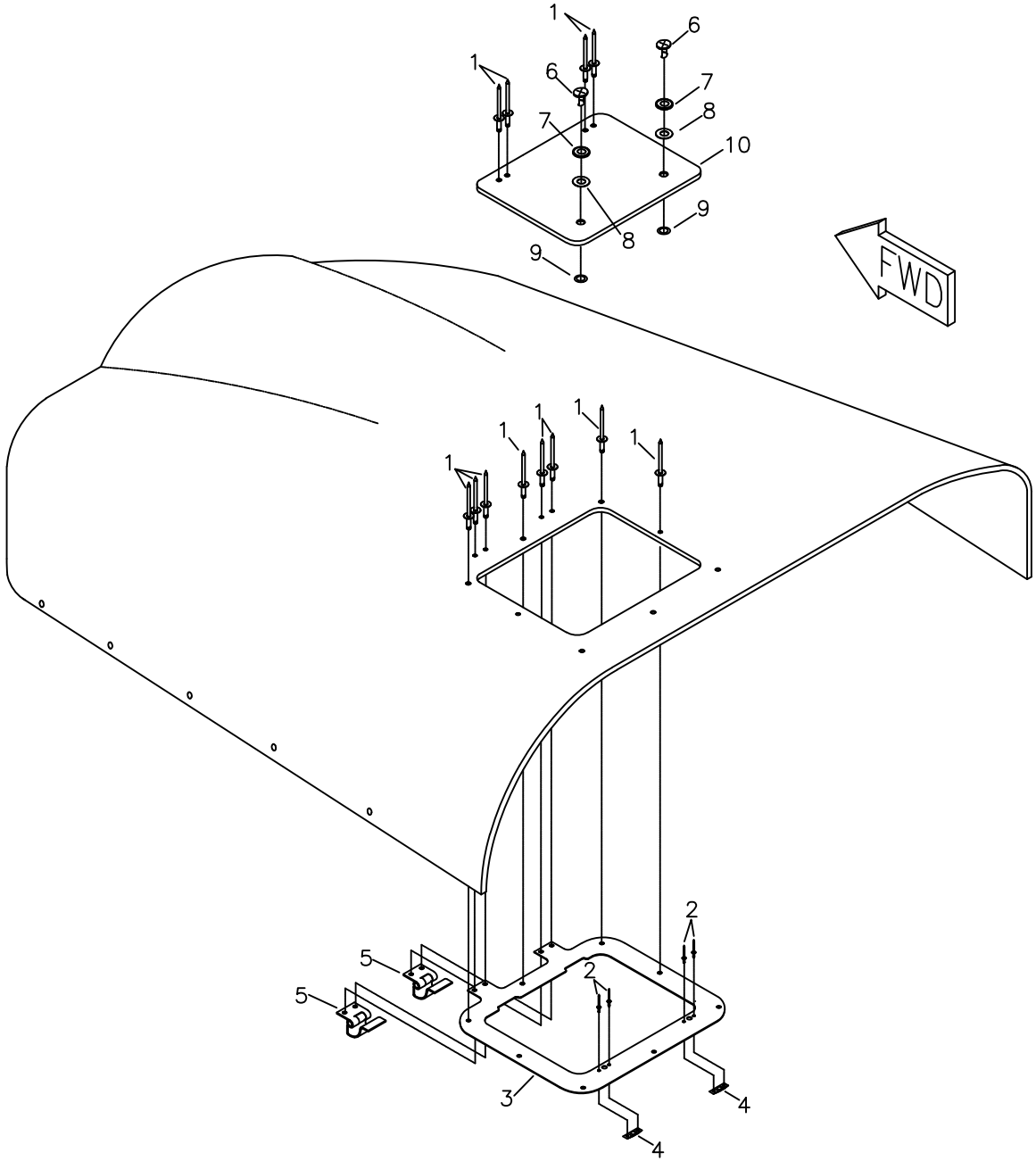

RANS S-21 OUTBOUND
ROTAX 915iS
OIL CHECK DOOR INSTALLATION

MD5657
REV. – ORIG

RANS S-21 OUTBOUND

ROTAX 915iS - OIL CHECK DOOR INSTALLATION

#	DESCRIPTION	PART NUMBER	QUANTITY
1.	1/8" Aluminu Rivet - Avex	1691-0410	18
2.	3/32" Aluminum Rivet	40APR1/4	4
3.	Reinforcement Ring - Maintenance Hatch	KPCW0015	1
4.	1/4 Turn Receptacle	#302	2
5.	Oil Door Hinge	KSHW0053	2
6.	1/4 Turn Stud	#180	2
7.	Rubber Washer	#201	2
8.	Wear Washer Nylon	#103	2
9.	Snap Ring	#101	2
10.	Maintenance Hatch	KPCW0036	1

*Use as needed for secure attachment
**Can be stacked in moderation to shim stud for appropriate length

NOTE: 1" PROP EXTENSION REQUIRED.
REFER TO PROPELLER INSTALLATION

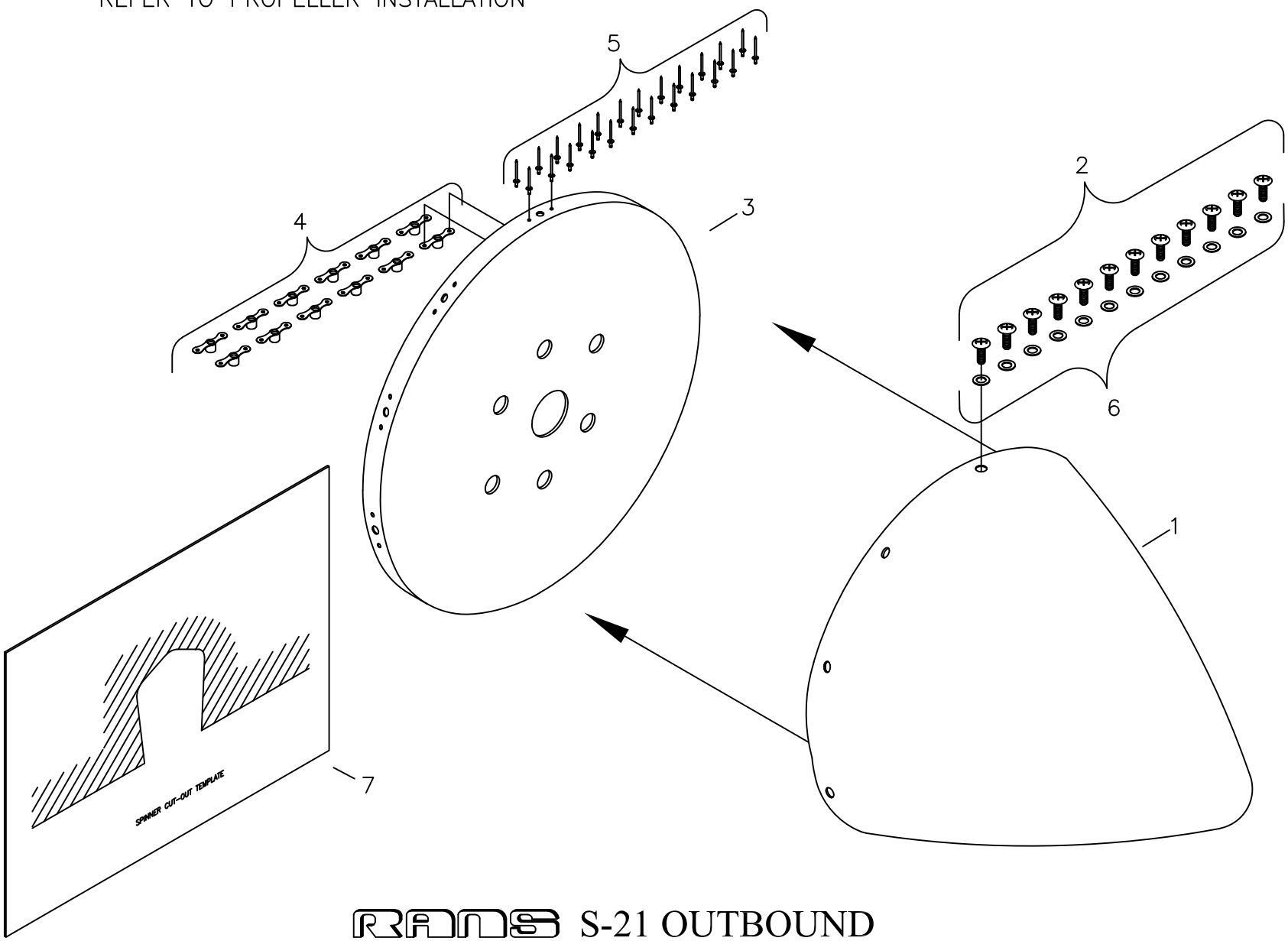

RANS S-21 OUTBOUND
ROTAX 915iS
OPTIONS-11.3" SPINNER ASSEMBLY

MD5657
REV. – ORIG

RANS S-21 OUTBOUND

ROTAX 915iS - OPTIONAL 11.3" SPINNER ASSEMBLY

#	DESCRIPTION	PART NUMBER	QUANTITY
1.	Spinner Dome - 11.3"	KSPW0095	1
2.	10-32 Pan Head Machine Screw	KSHW0071	12
3.	Spinner Backing Plate - 11.3"	KPPW0296	1
4.	3/16" Nut Plate	K-1000-3	12
5.	3/32" Aluminum Rivet	40APR1/4	24
6.	3/16" Thin Washer	AN960-10L	12
7.	Spinner Cut-out Template *	-----	0

*Refer to Figures Manual for Spinner Cut-out Template

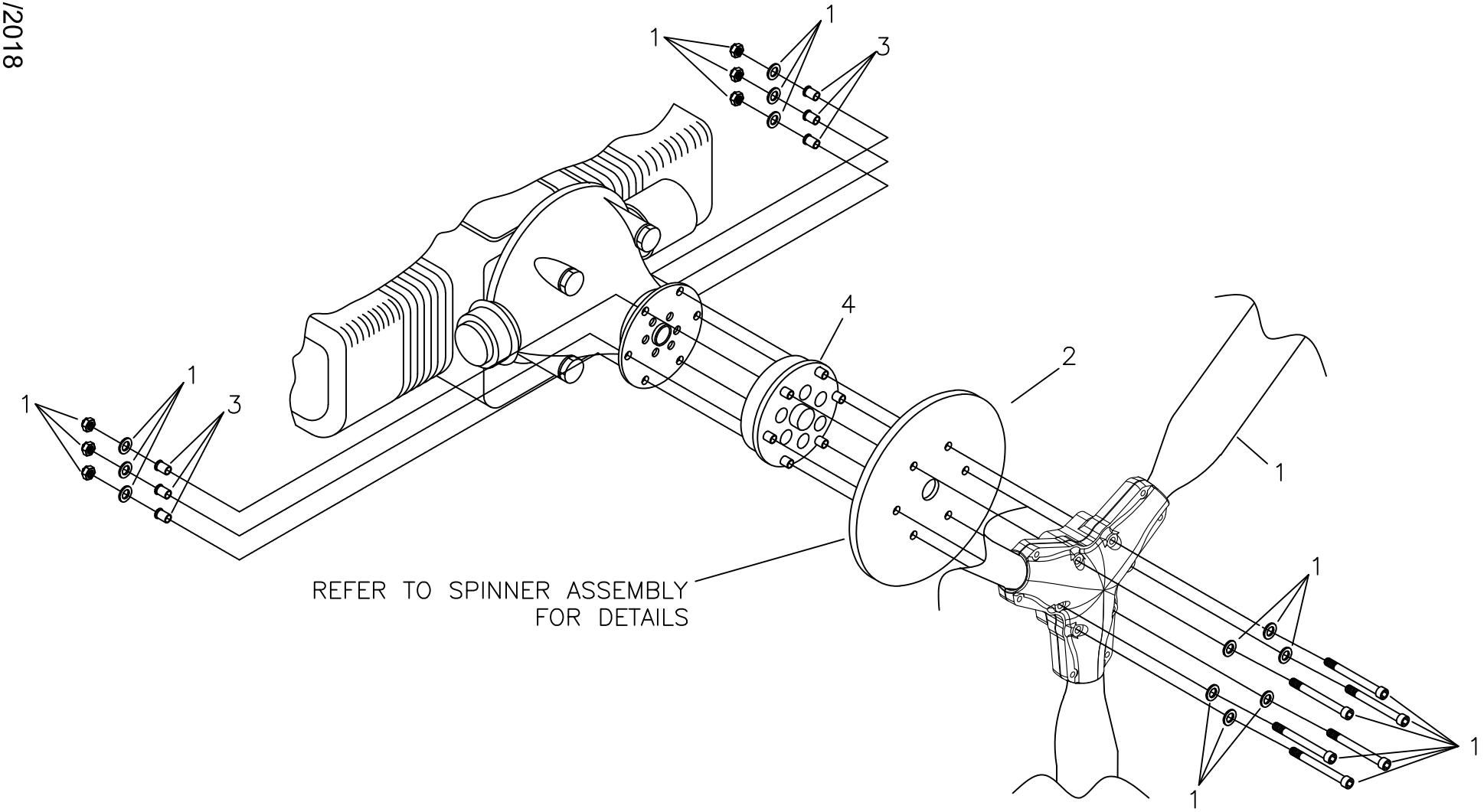

RANS S-21 OUTBOUND
ROTAX 915iS
OPTIONS - WHIRL WIND PROPELLER INSTALLATION

MD5657
REV. – ORIG

RANS S-21 OUTBOUND

ROTAX 915iS - OPTIONAL WHIRLWIND PROPELLER INSTALLATION

#	DESCRIPTION	PART NUMBER	QUANTITY
1.	Whirlwind Ground Adjustable Prop 70" *	KSPR0005	1
2.	Spinner Backing Plate - 11.3" **	-----	0
3.	Flange Bushing - 912	KPPW0038	6
4.	1" Prop Extension	KAPW0076	1

*Mounting Hardware Supplied with Prop
**Referenced from 11.3" Spinner Assembly Installation

REFER TO AIRMASTER PROP MANUAL

RANS S-21 OUTBOUND
ROTAX 915iS
OPTIONS - AIR MASTER PROPELLER INSTALLATION

MD5657
REV. – ORIG

RANS S-21 OUTBOUND

ROTAX 915iS - OPTIONAL AIRMASTER PROPELLER

#	DESCRIPTION	PART NUMBER	QUANTITY
1.	3 Blade Airmaster Propeller - Rotax 915iS *	KSPR0006	1

*Optional Prop

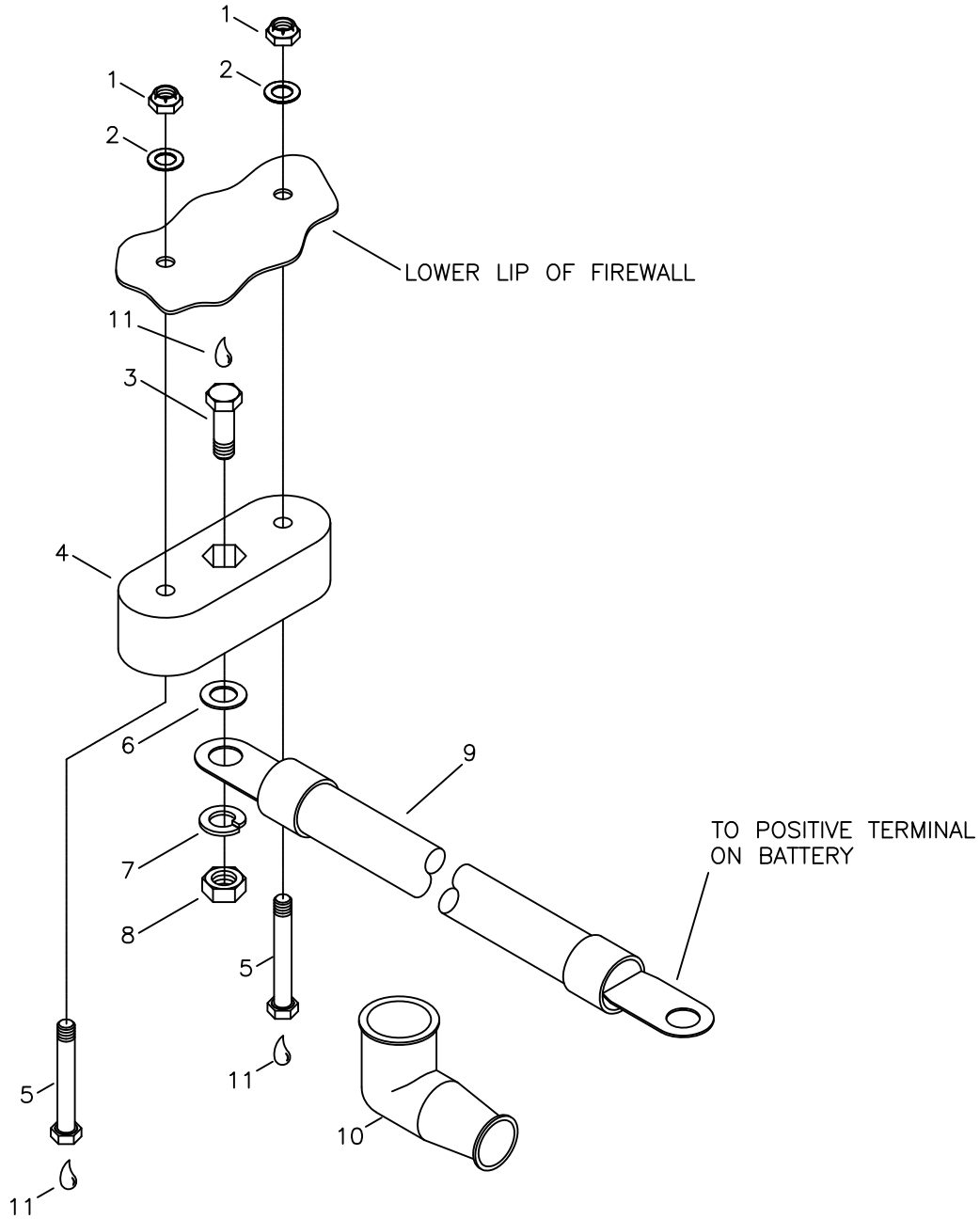

RANS S-21 OUTBOUND
ROTAX 915iS
OPTIONS - REMOTE CHARGING POST INSTALLATION

MD5657
REV. – ORIG

RANS S-21 OUTBOUND

ROTAX 915iS - OPTIONS - REMOTE CHARGING POST INSTALLATION

#	DESCRIPTION	PART NUMBER	QUANTITY
1.	3/16" Shear Nut - Steel	AN364-1032C	2
2.	3/16" Thin Washer	AN960-10L	2
3.	1/4" Plain Bolt	1/4 x 1 BOLT	1
4.	Isolator Block	KPES0026	1
5.	3/16" Bolt	AN3-7A	2
6.	1/4" Thick Washer	AN960-416	1
7.	1/4 Loc Washer	AN935-416L	1
8.	1/4 Plain Nut	AN345-416	1
9.	Remote Charge Post Cable	KAES0017	1
10.	Terminal Boot	MS25171-3S	1
11.	RTV High Temp Silicone *	-----	0

*Builder Supplied