# S-21 OUTBOUND

## FIGURES MANUAL

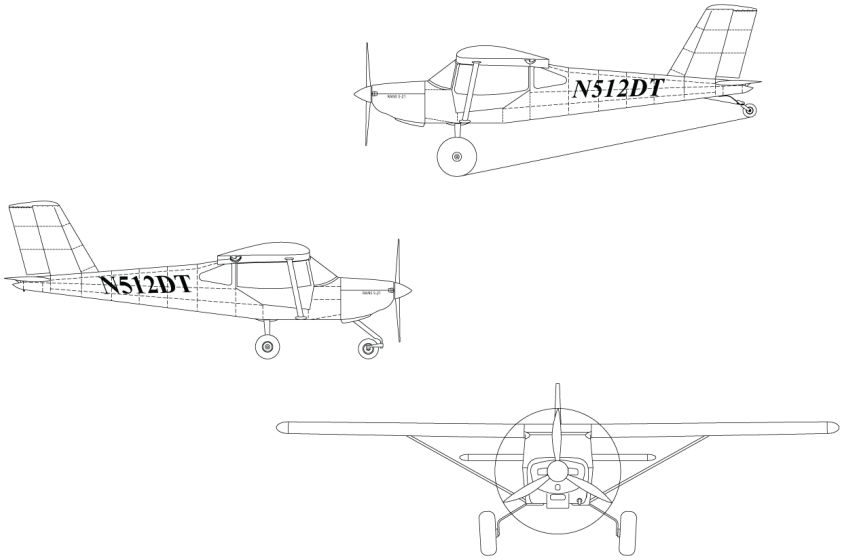


Serial Number: _____

Registration Number: _____

COPYRIGHT © 2017
**RANS DESIGNS**
**4600 HWY 183 Alt**
**HAYS, KANSAS, USA 67601**
**785-625-6346**
**WWW.RANS.COM**

This manual conforms to FAA Evaluated date 9/11/2018

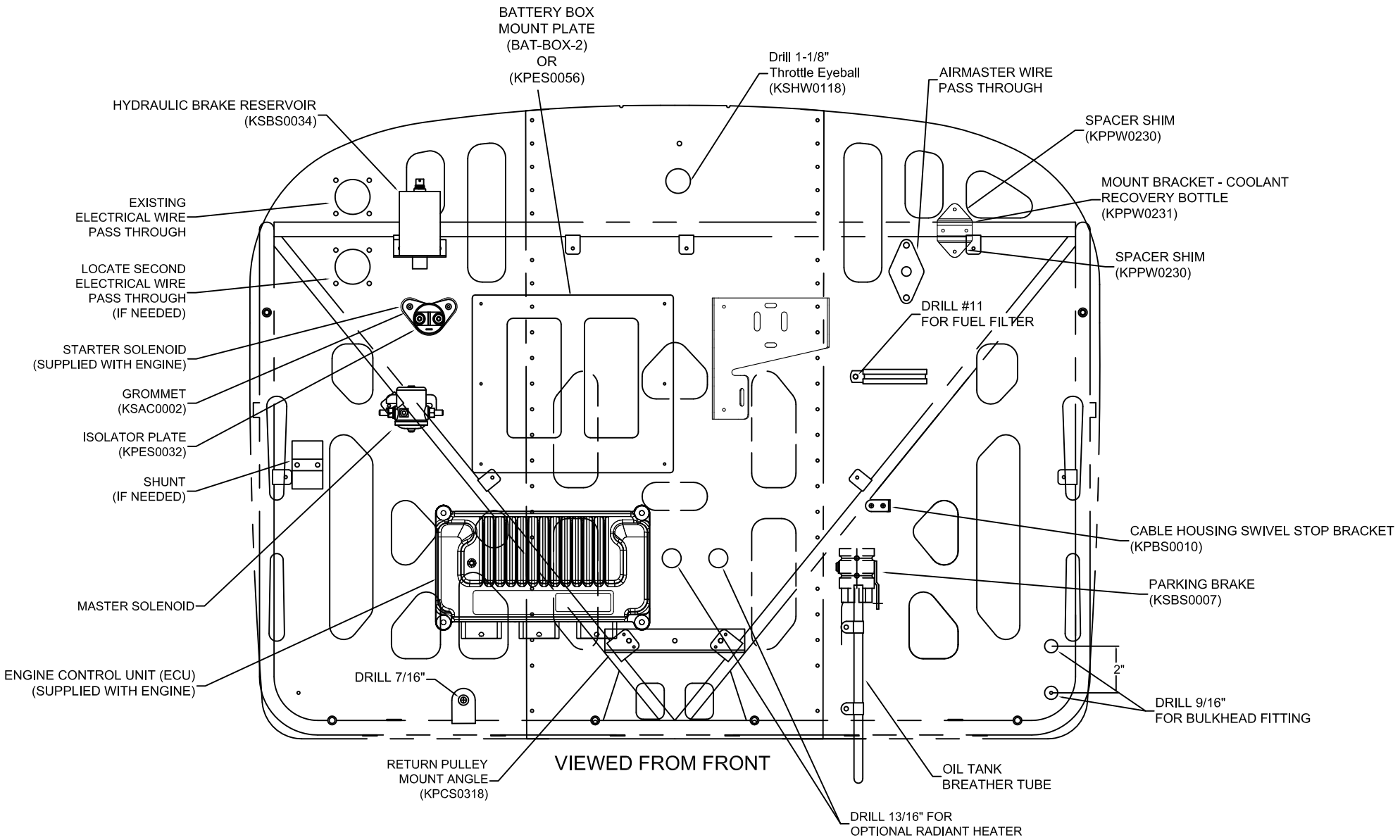


MD5660
REV. - ORIG

# RANS S-21 OUTBOUND
# FIREWALL MODIFICATION
# FIGURE 11-01/915iS

09/11/2018

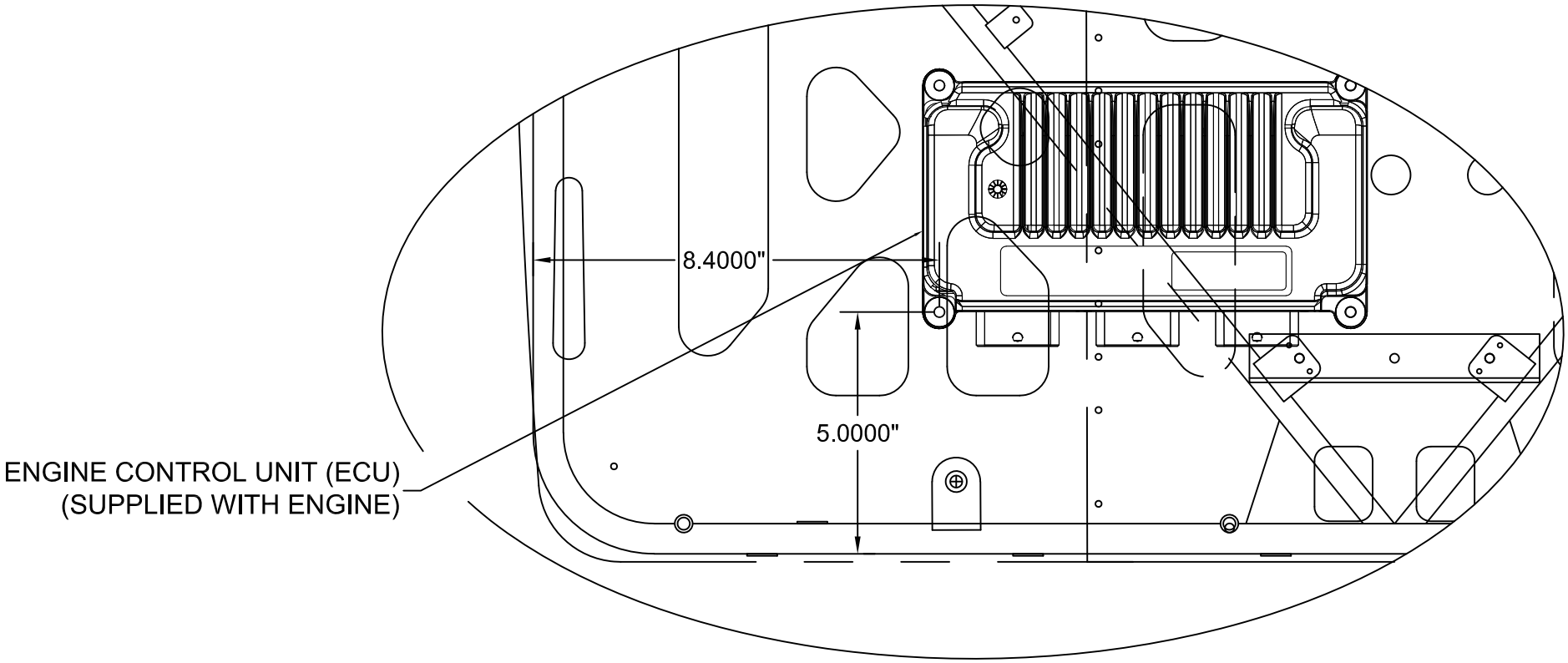


VIEWED FROM FRONT

MD5660
REV. - ORIG

RANS S-21 OUTBOUND
ECU MOUNTING LOCATION
FIGURE 11-01A/915iS

09/11/2018

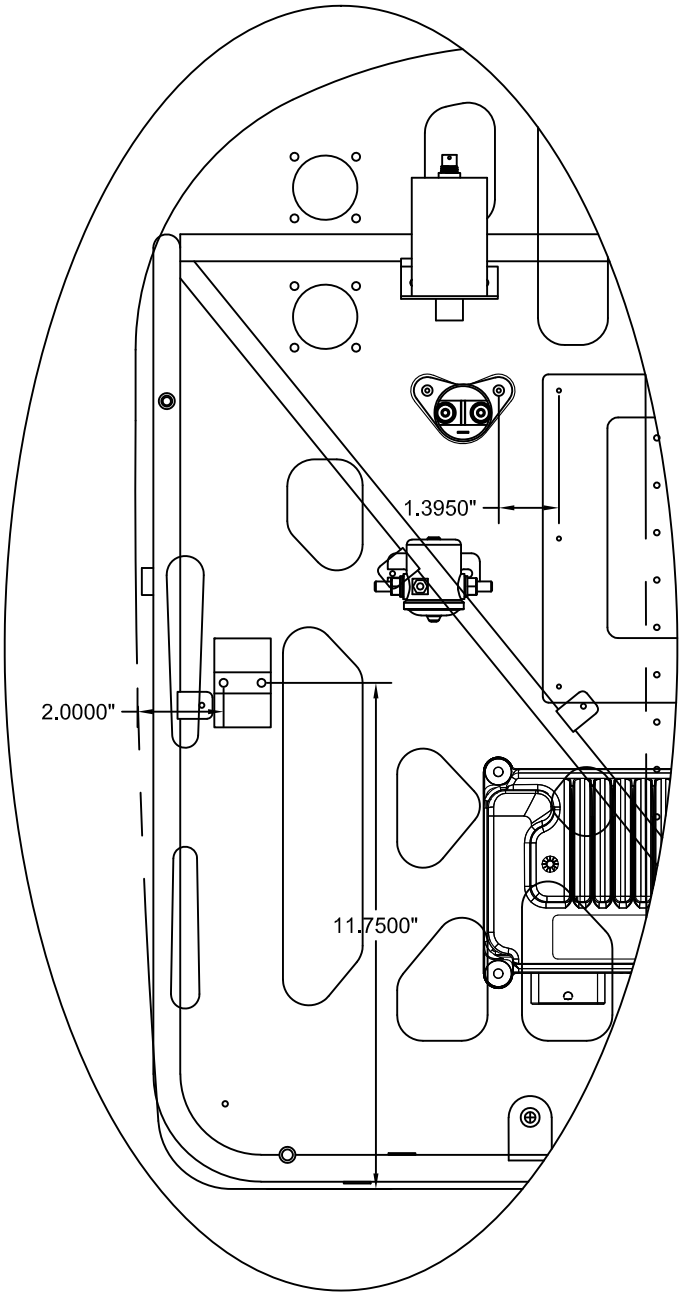


VIEWED FROM FRONT

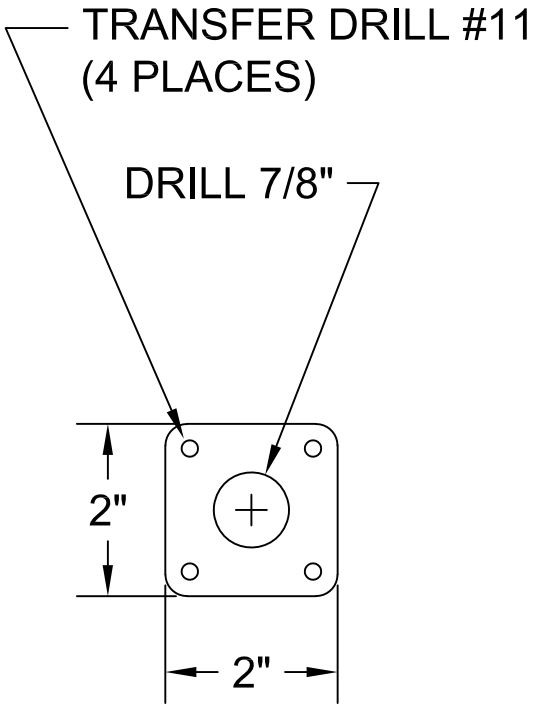


WIRE PASS-THRU
FABRICATION

RANS S-21 OUTBOUND
ROTAX 915iS
ELECTRICAL ACCESSORIES AND
HYDRAULIC BRAKE RESIVOR LOCATION
FIGURE 11-01B/915iS

MD5660
REV. - ORIG

09/11/2018

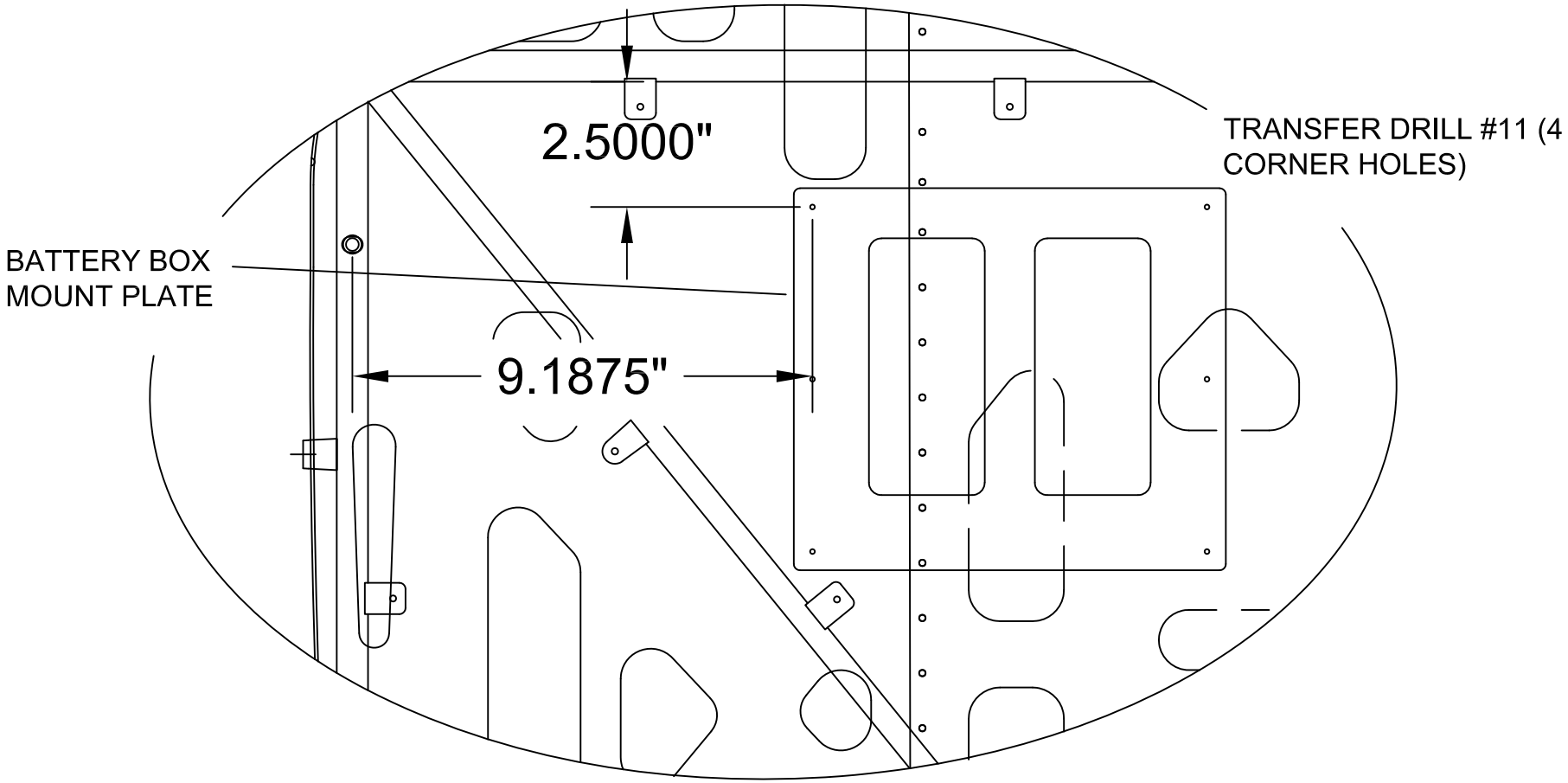


VIEWED FROM FRONT

MD5660
REV. - ORIG

RANS S-21 OUTBOUND
BATTERY BOX LOCATION
FIGURE 11-01C/915iS

09/11/2018

CENTER BATTERY BAR AND DRILL #40
AS NECESSARY

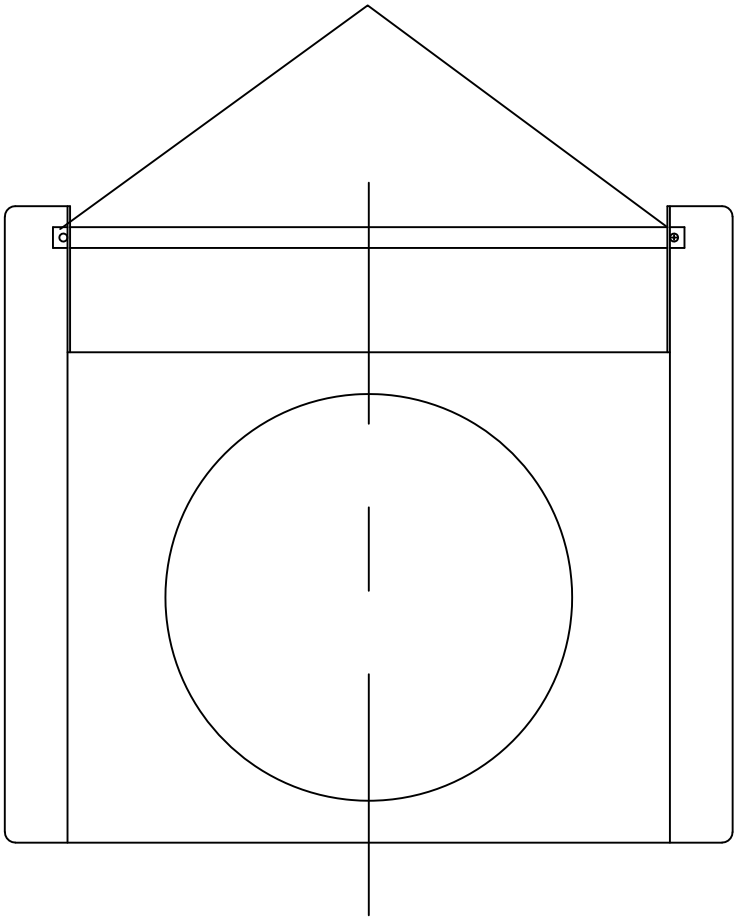

RANS S-21 OUTBOUND
ROTAX 915iS
BATTERY BAR MODIFICATION
FIGURE 11-01D/915iS

MD5660
REV. - ORIG

09/11/2018

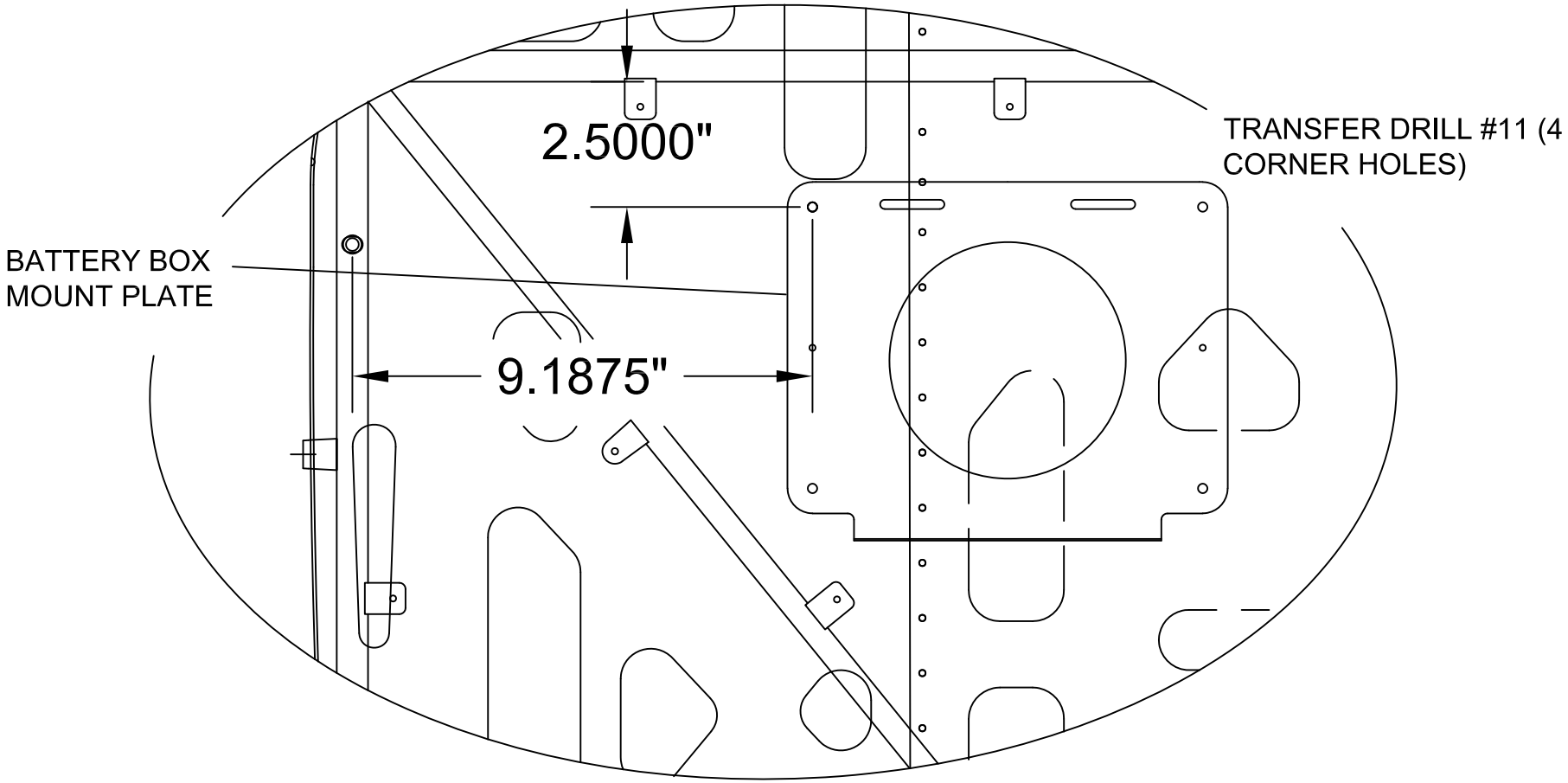


VIEWED FROM FRONT

MD5660
REV. - ORIG

RANS S-21 OUTBOUND
EARTH-X BATTERY BOX LOCATION
FIGURE 11-01E/915iS

09/11/2018

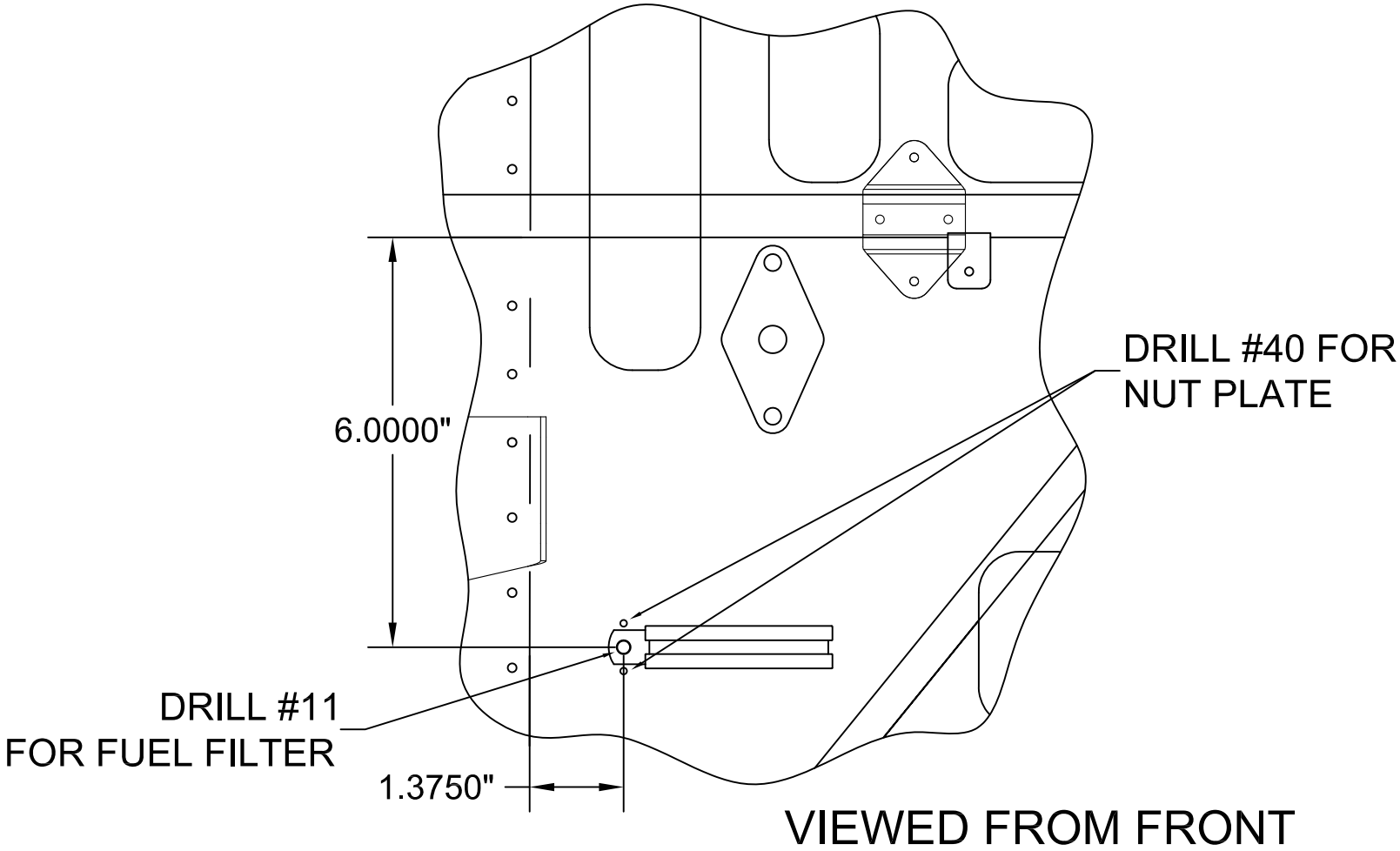


MD5660
REV. - ORIG

RANS S-21 OUTBOUND
FINE FUEL FILTER LOCATION
FIGURE 11-01F/915iS

09/11/2018

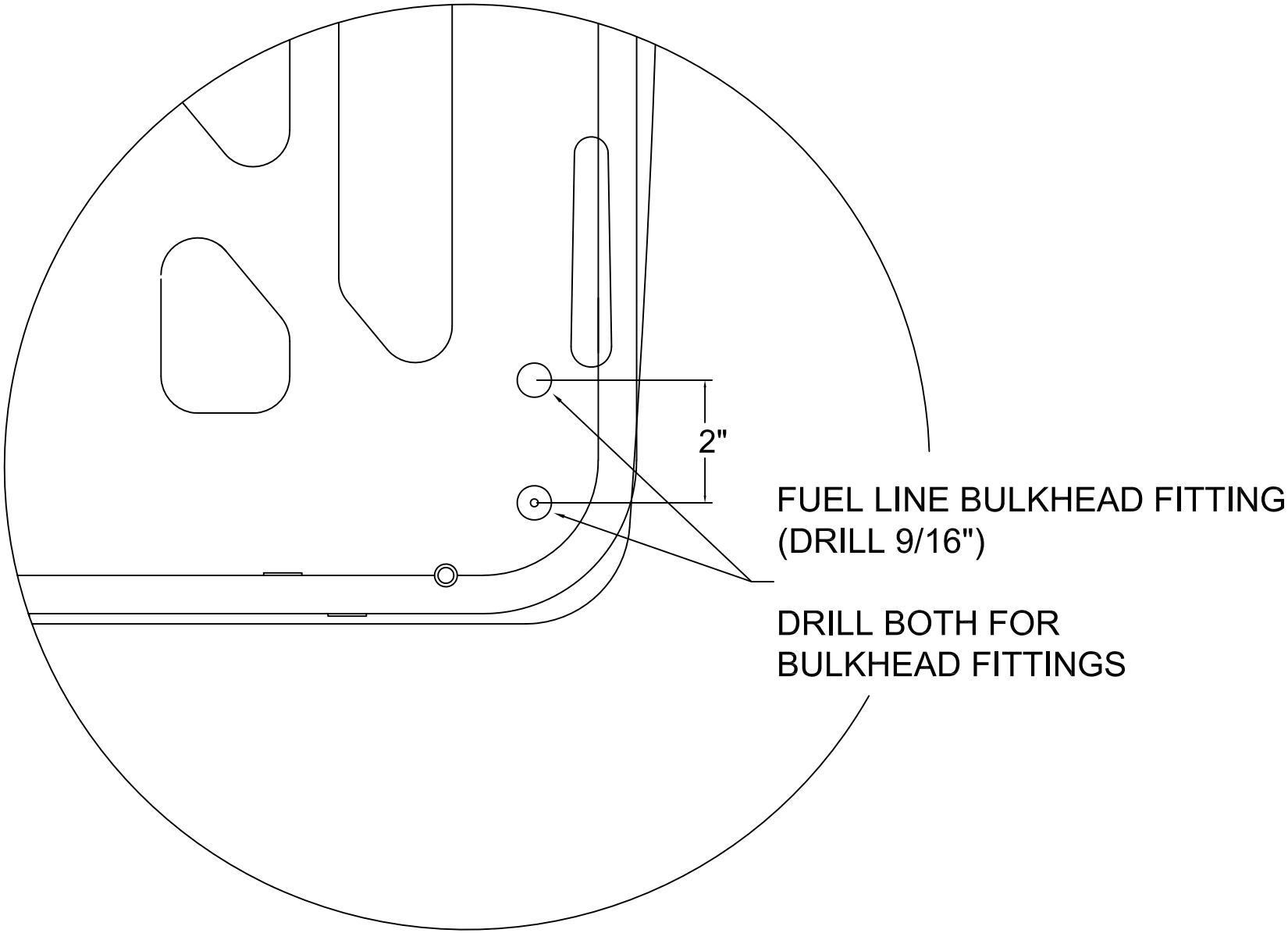


VIEWED FROM FRONT

MD5660
REV. - ORIG

RANS S-21 OUTBOUND
FUEL LINE BULKHEAD LOCATION
FIGURE 11-01G/915iS

09/11/2018

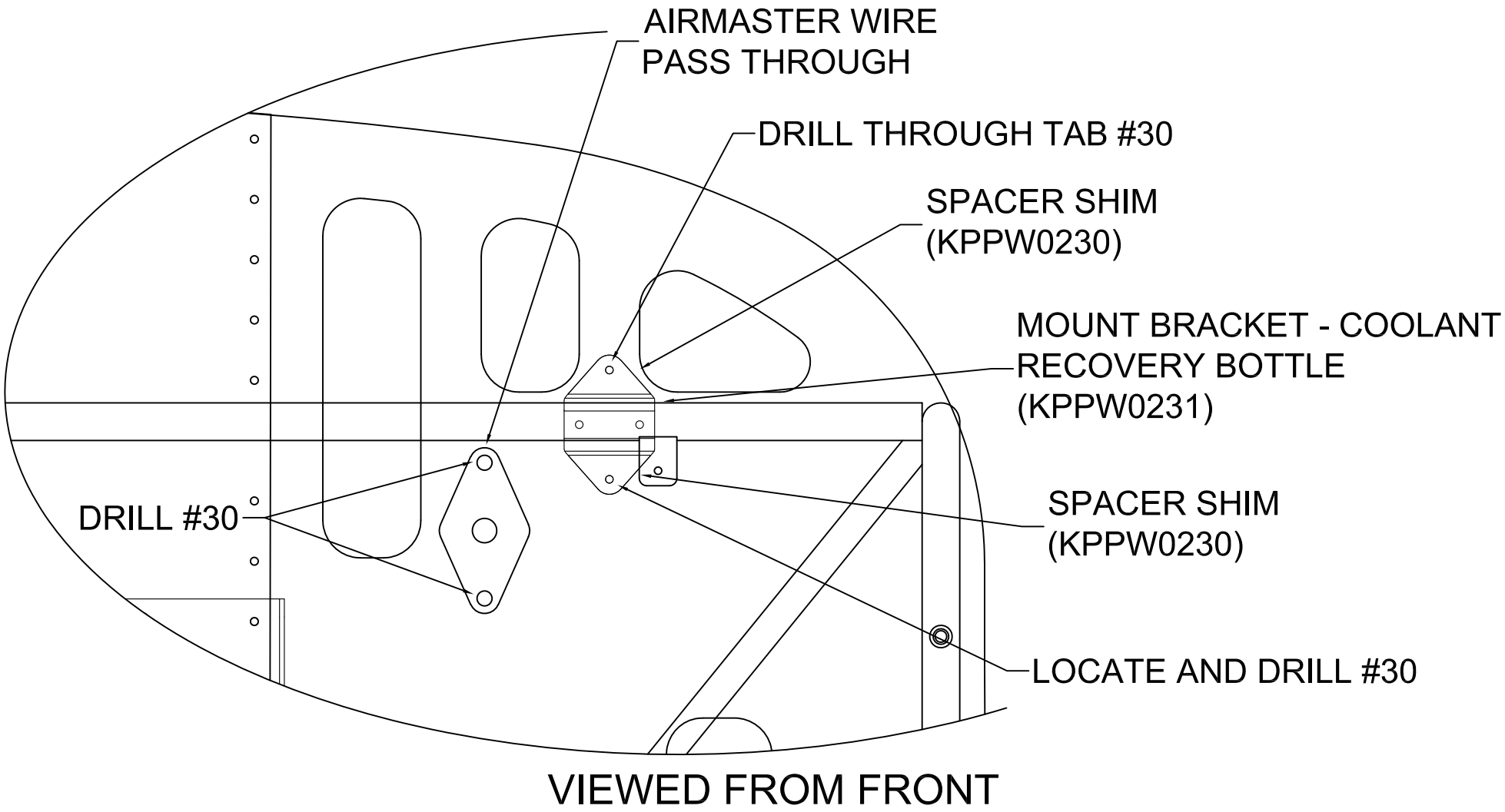


RANS S-21 OUTBOUND

MD5660
REV. - ORIG

COOLANT RECOVERY BOTTLE MOUNT AND AIRMASTER
WIRE PASSTRHOUGH LOCATION
FIGURE 11-01H/915iS

09/11/2018

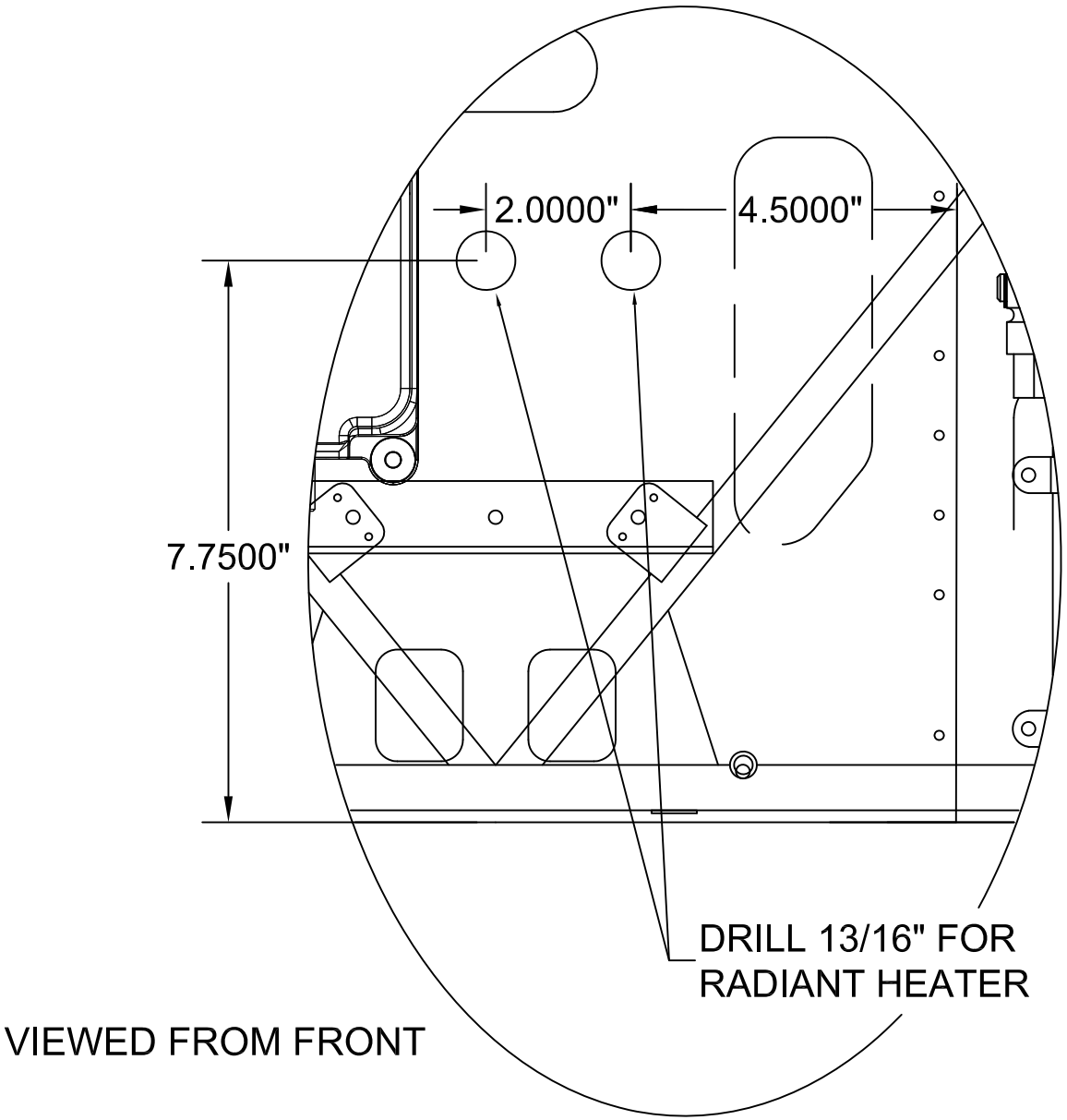


MD5660
REV. - ORIG

RANS S-21 OUTBOUND
RADIANT HEAT FIREWALL BULKHEAD LOCATION
FIGURE 11-01I/915iS

09/11/2018

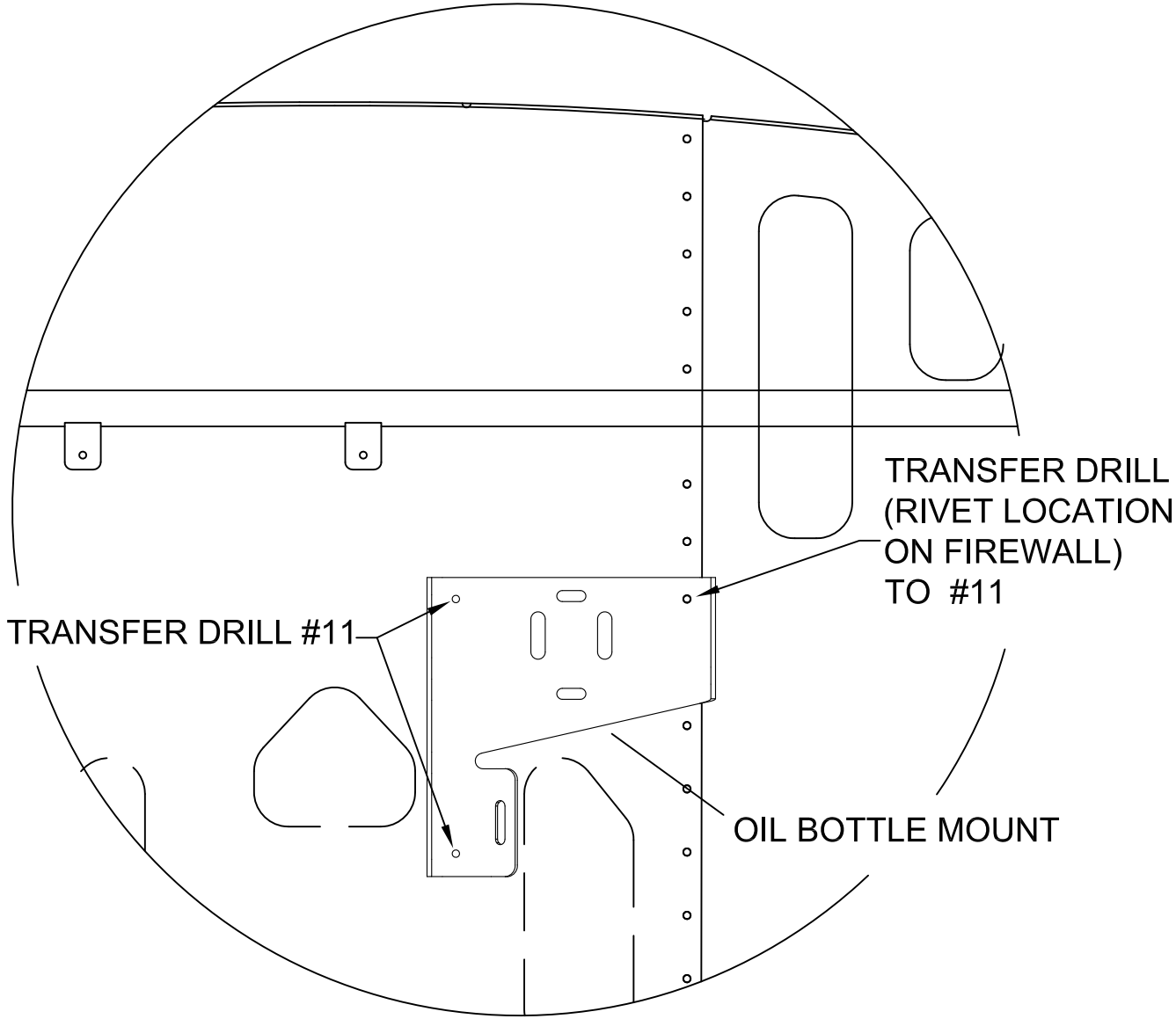


VIEWED FROM FRONT

MD5660
REV. - ORIG

RANS S-21 OUTBOUND
OIL BOTTLE MOUNT LOCATION
FIGURE 11-01J/915iS

OIL TANK VENT TUBE
(3/8" X .035" TUBING)
FABRICATE 1 FROM RAW STOCK

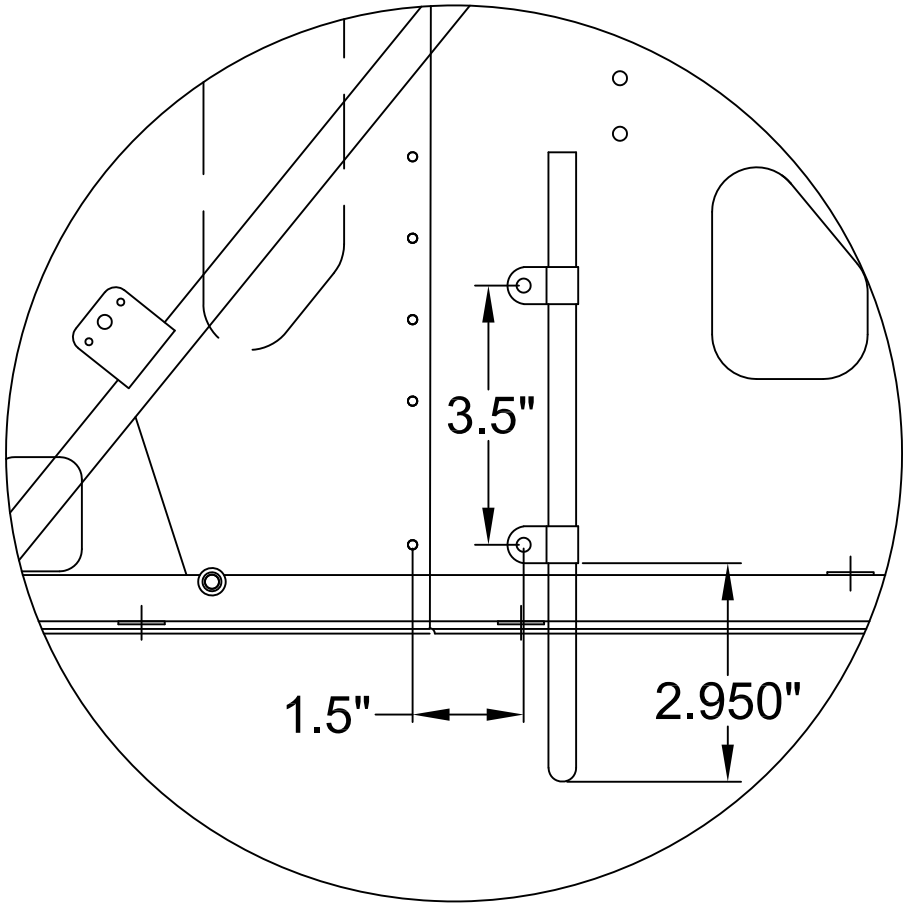


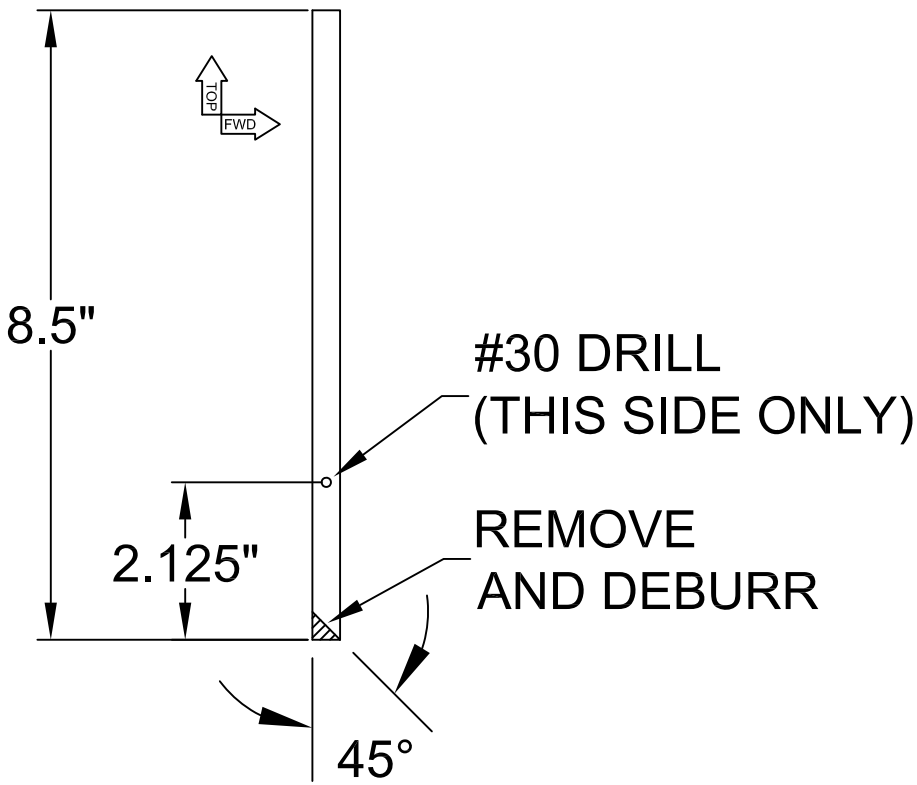


VIEWED FROM FRONT

MD5660
REV. - ORIG

RANS S-21 OUTBOUND
OIL TANK VENT TUBE INSTALLATION
FIGURE 11-01K/915iS

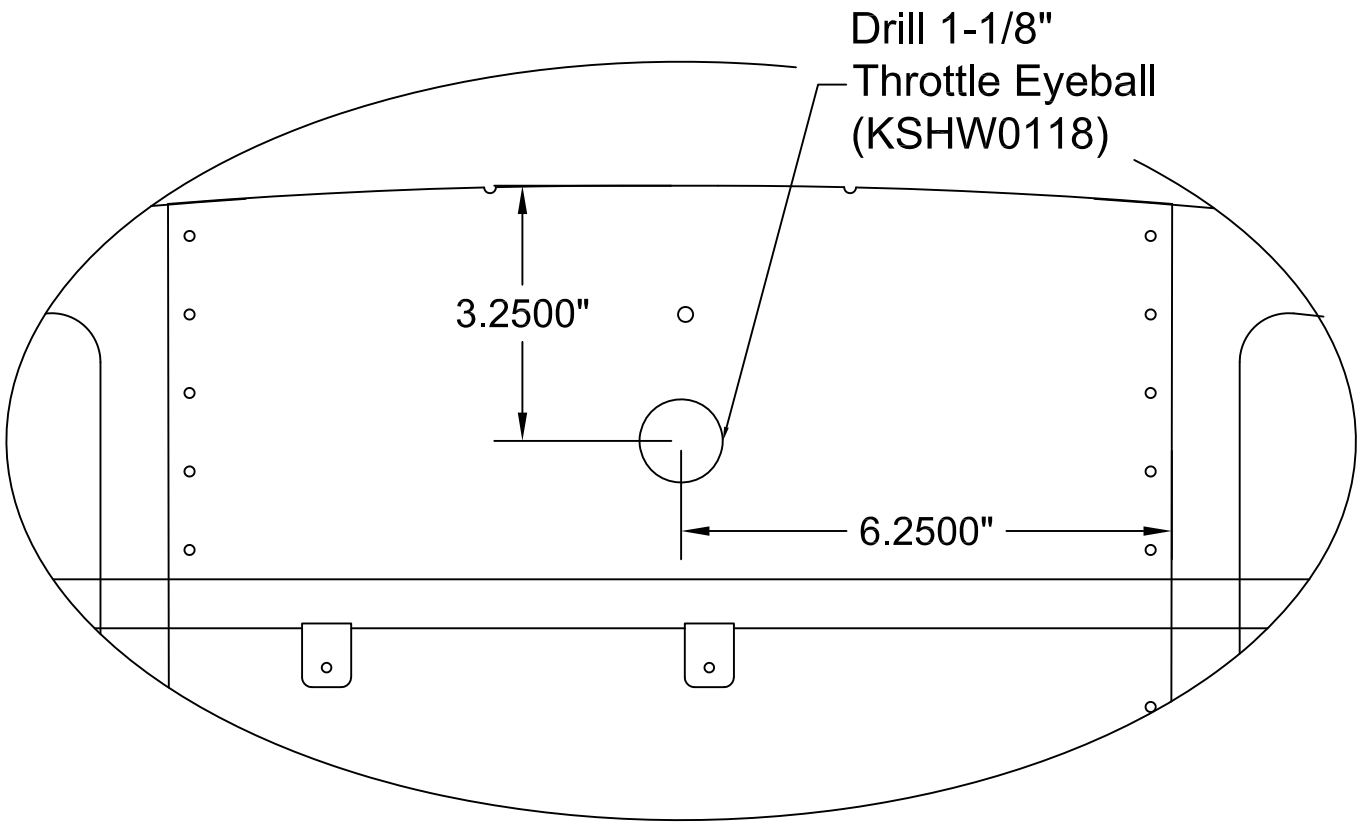


VIEWED FROM FRONT

MD5660
REV. - ORIG

RANS S-21 OUTBOUND
THROTTLE FIREWALL CABLE EXIT LOCATION
FIGURE 11-01L/915iS

09/11/2018

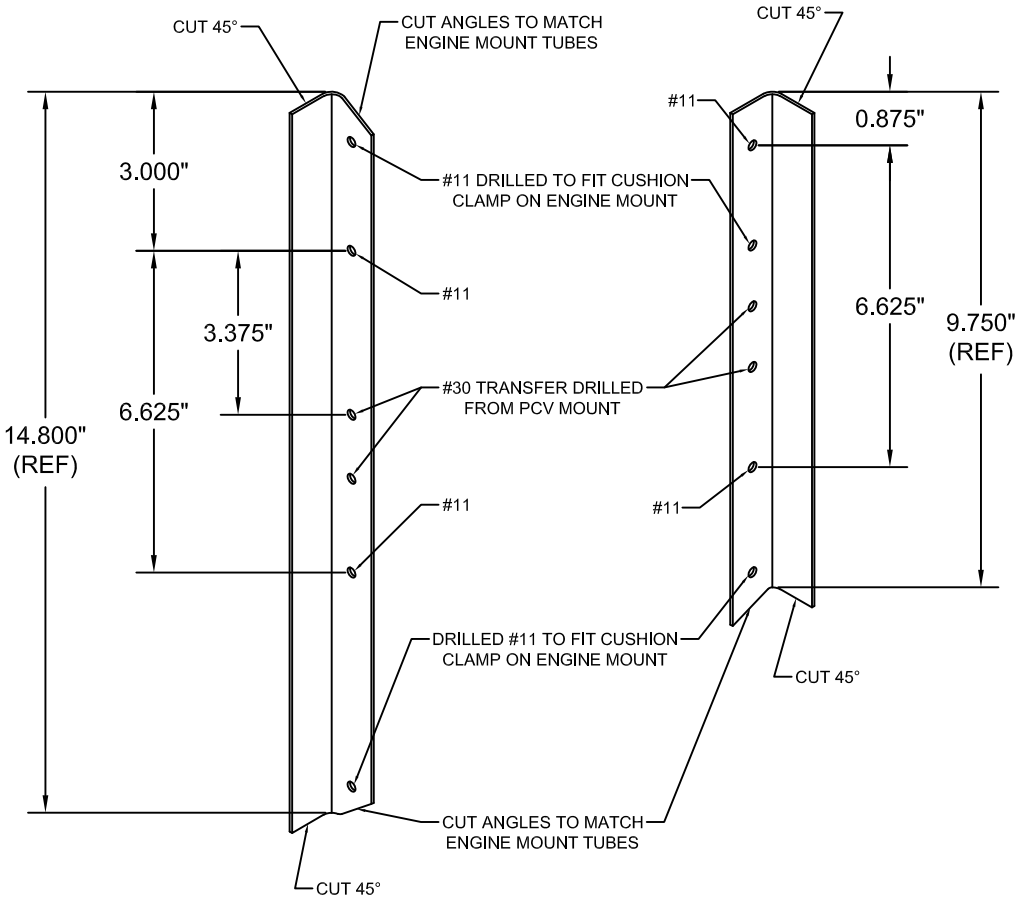


(REMOVE ALL SHARP CORNERS)

RANS S-21 OUTBOUND

ROTAX 915iS

FUSE BOX ANGLE MOUNT MODIFICATION

FIGURE 11-02/915iS

MD5660
REV. - ORIG

09/11/2018

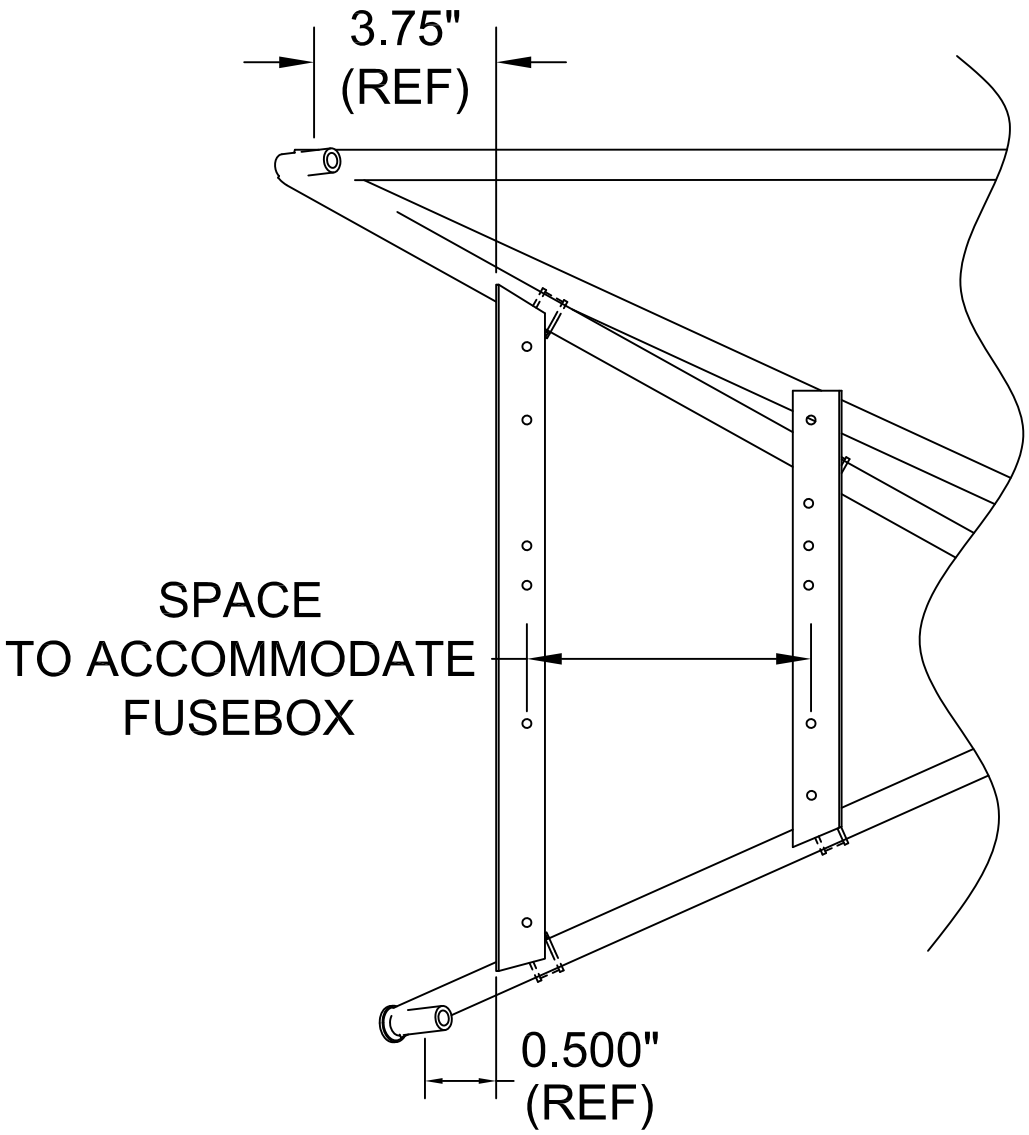


RANS S-21 OUTBOUND

ROTAX 915iS

FUSE BOX ANGLE MOUNT MODIFICATION

FIGURE 11-02A/915iS

MD5660
REV. - ORIG

09/11/2018

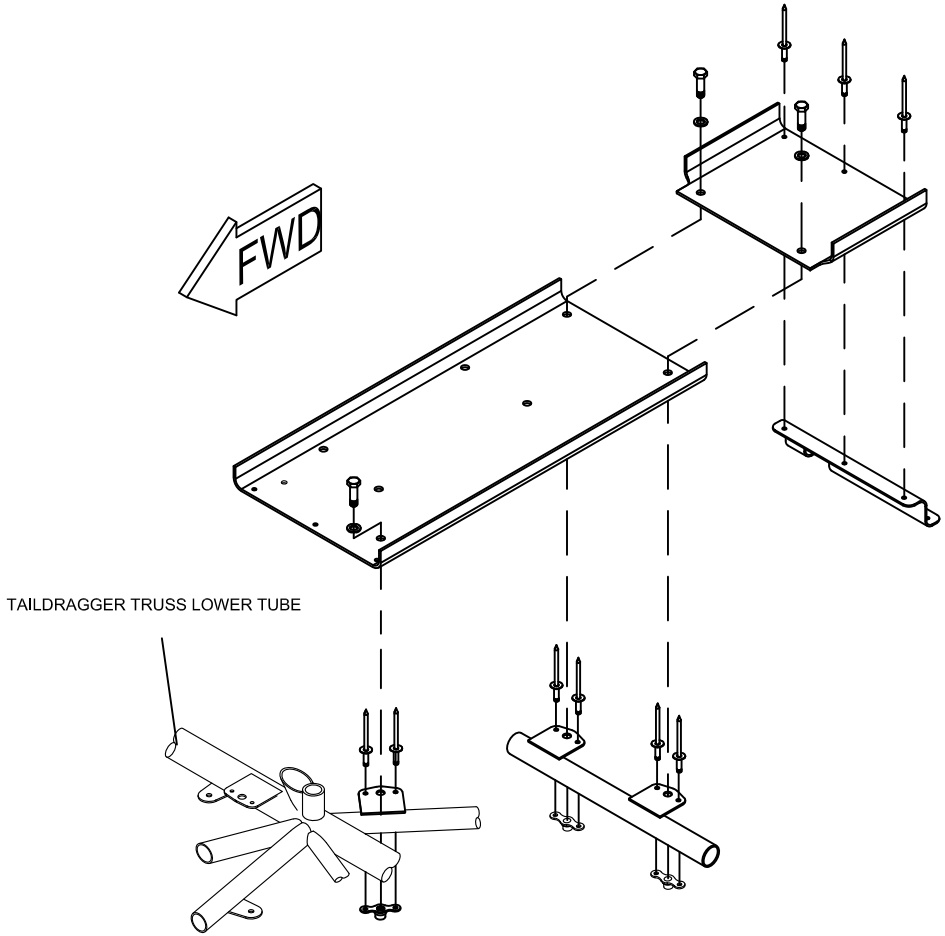


WITH AUTOPILOT

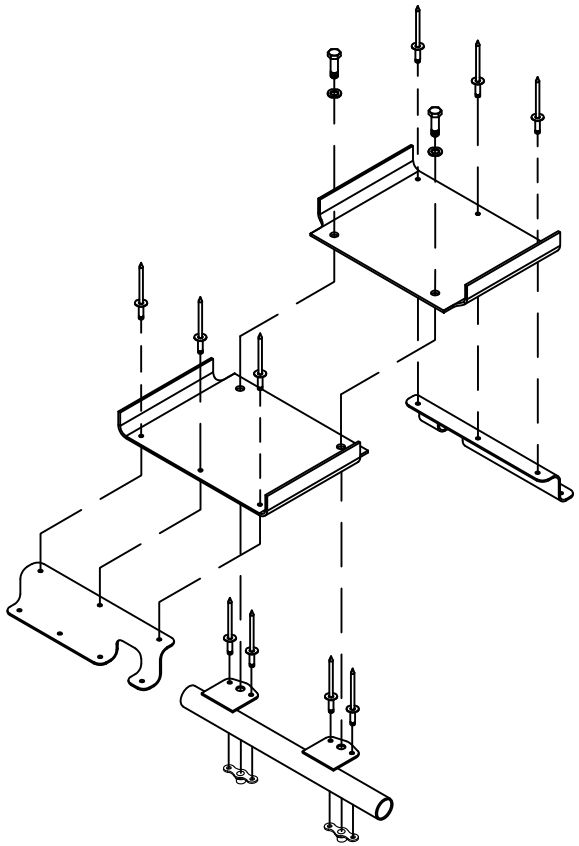

WITHOUT AUTOPILOT

# RANS S-21 OUTBOUND
## ROTAX 915iS
## FUEL PUMP w/PITCH SERVO & w/o PITCH SERVO
## FIGURE 11-03/915iS

MD5660
REV. -ORIG

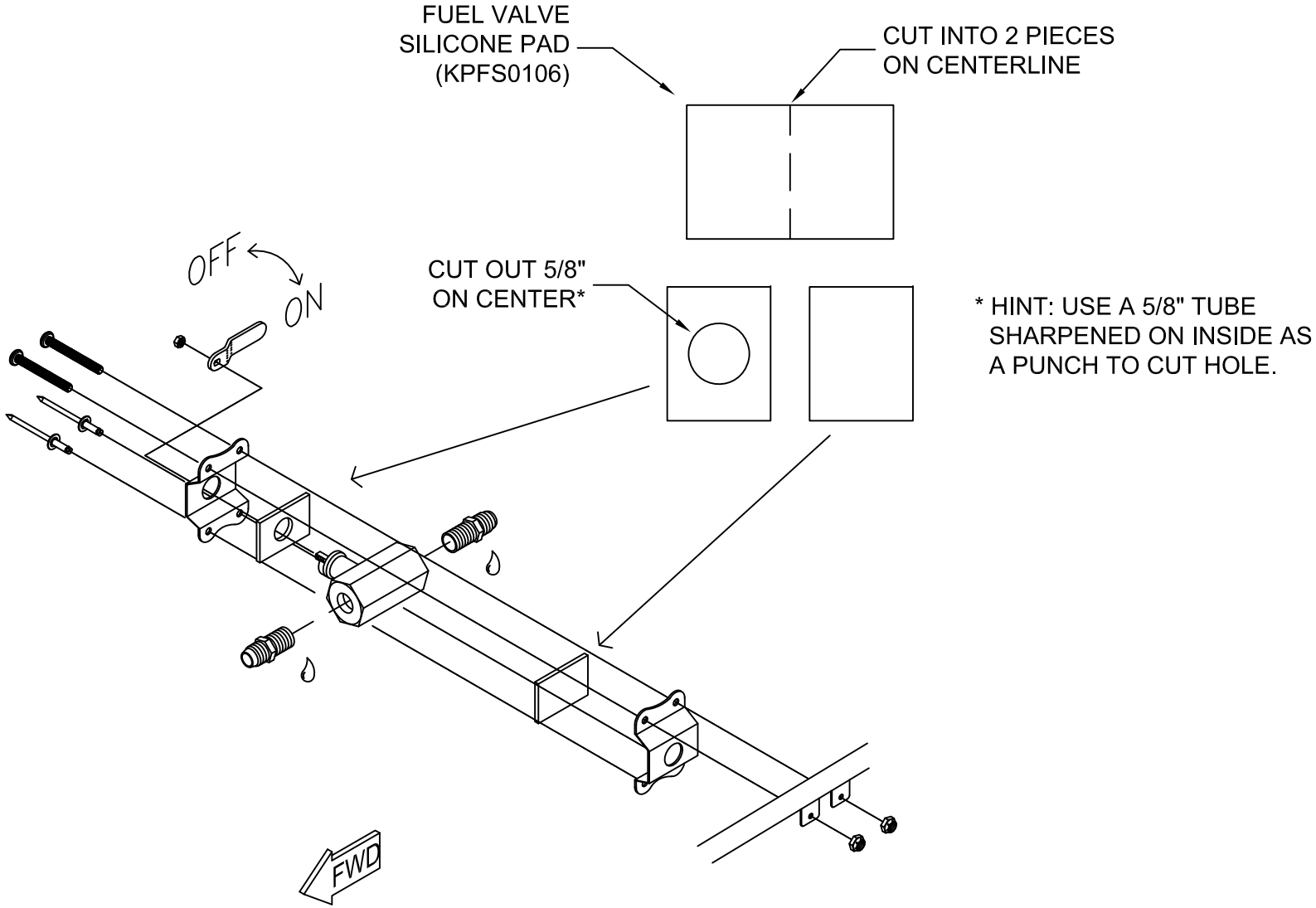


MD5660
REV. - ORIG

RANS S-21 OUTBOUND
ROTAX 915iS
FUEL VALVE MOUNTING
FIGURE 11-03A/915iS

09/11/2018

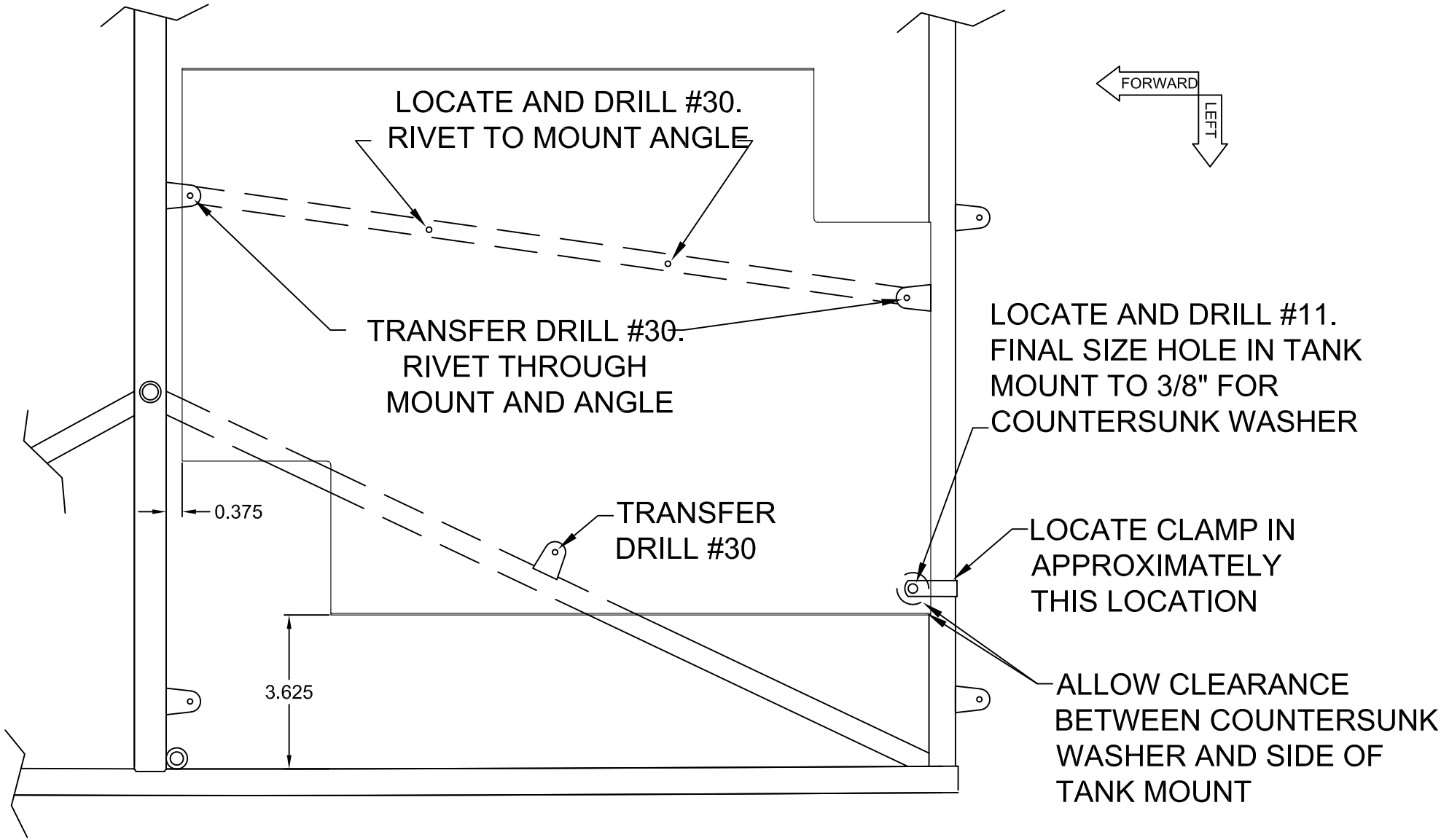


RANS S-21 OUTBOUND
ROTAX915iS
6.9 GALLON HEADER TANK MOUNT
FIGURE 11-03B/915iS

MD5660
REV. - ORIG

09/11/2018

* IF POSSIBILITY OF CONVERTING FROM EITHER TRIKE OR TAILDRAGGER, YOU MAY WISH TO INSTALL BOTH TRIKE AND TAILDRAGGER SUMP DRAINS.

** SUMP DRAIN SHOULD BE LOCATED IN APPROXIMATELY THIS AREA WHEN FINAL DRILLED AND INSTALLED.

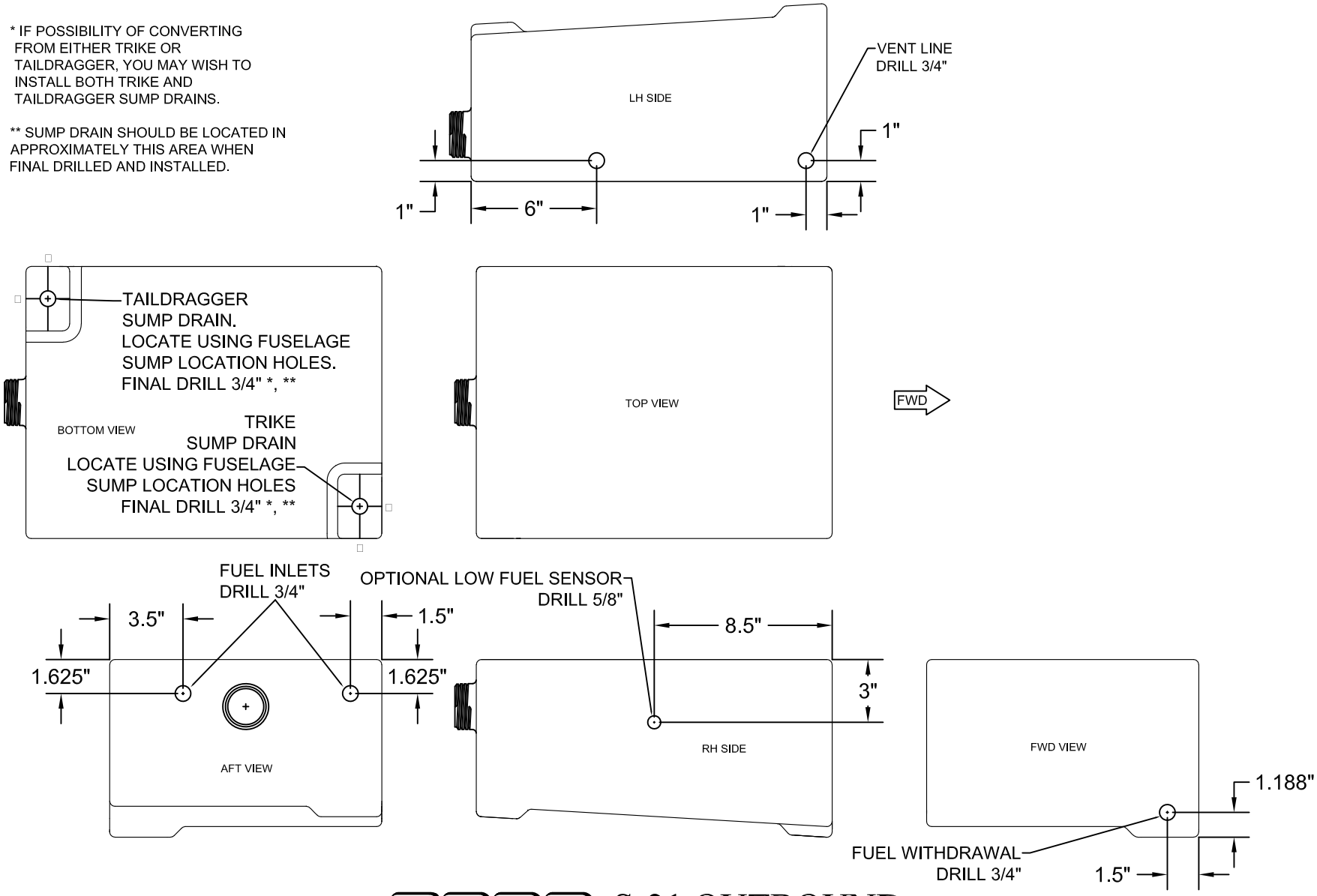


# RANS S-21 OUTBOUND
# ROTAX 915iS
# 6.9 GALLON HEADER TANK MODIFICATION
# FIGURE 11-03C/915iS

MD5660
REV. -ORIG

09/11/2018

1

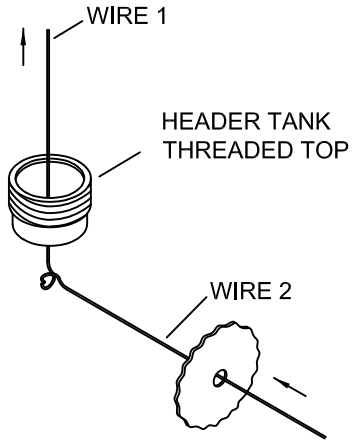


2

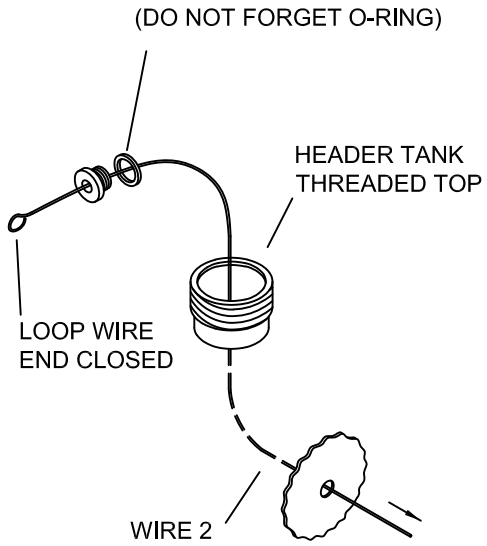


3 INSTALL RUBBER WASHER, STEEL WASHER, LOCTITE, AND NUT.

4 REMOVE WIRE.

# RANS S-21 OUTBOUND
# ROTAX 915iS
# HEADER TANK FITTING INSTALLATION
# FIGURE 11-03D/915iS

MD5660
REV. - ORIG

09/11/2018

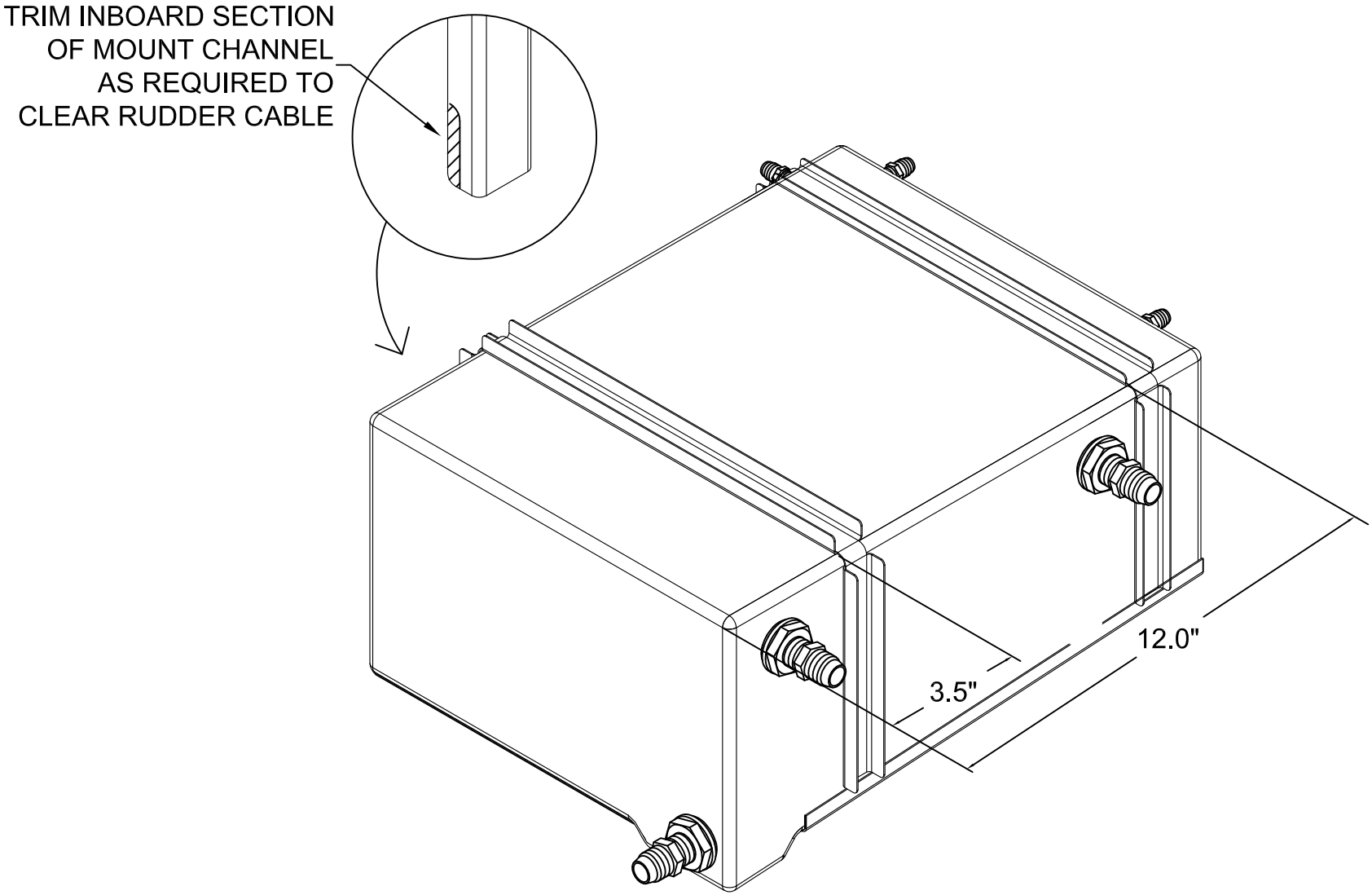


RANS S-21 OUTBOUND
ROTAX 915iS
6.9 GALLON HEADER TANK
MOUNT CHANNEL LOCATION
FIGURE 11-03E/915iS

MD5660
REV. - ORIG

09/11/2018

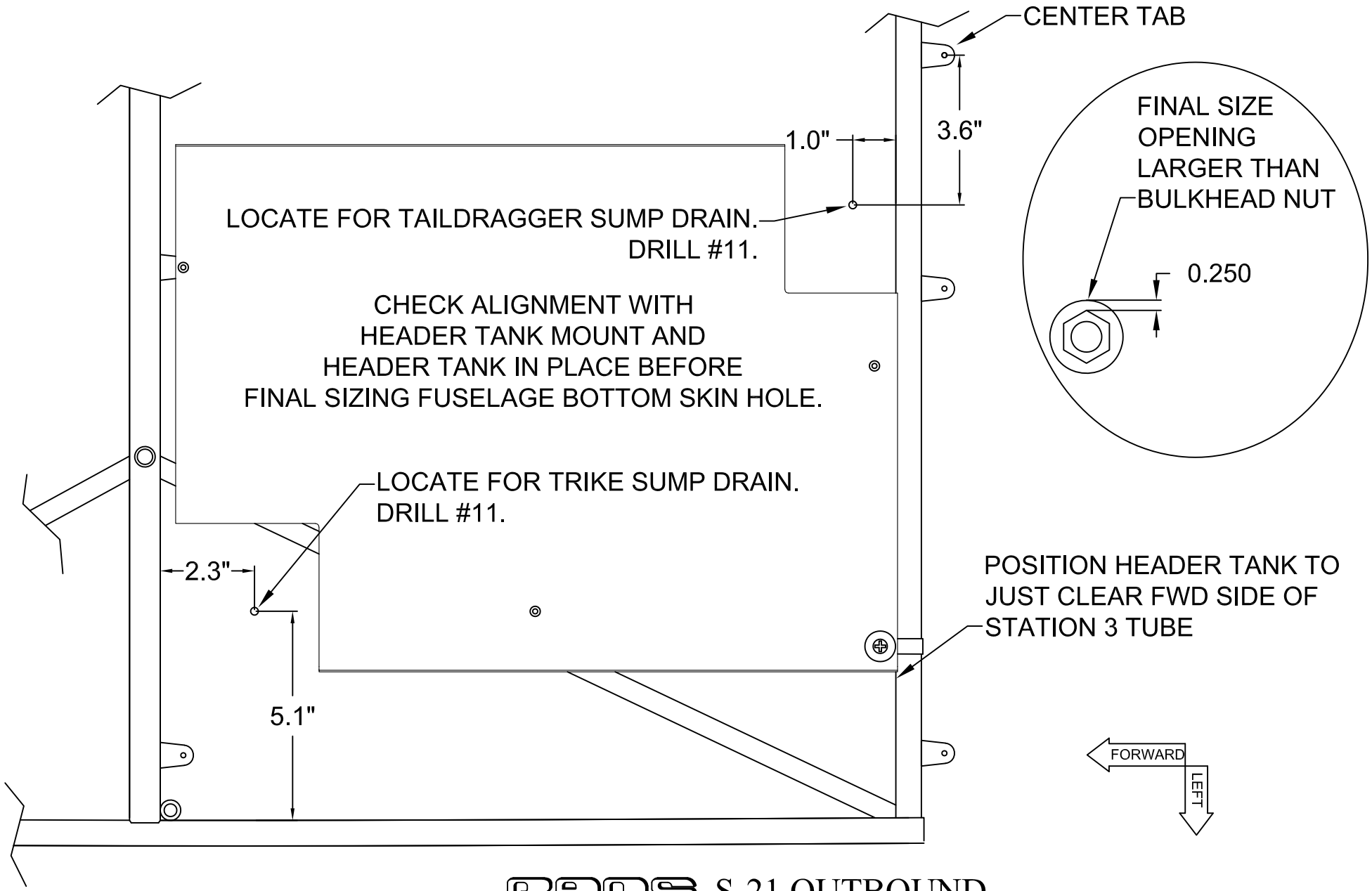


RANS S-21 OUTBOUND
ROTAX 915iS
6.9 GALLON HEADER TANK
SUMP HOLE LOCATIONS
FIGURE 11-03F/915iS

MD5660
REV. ORIG

09/11/2018

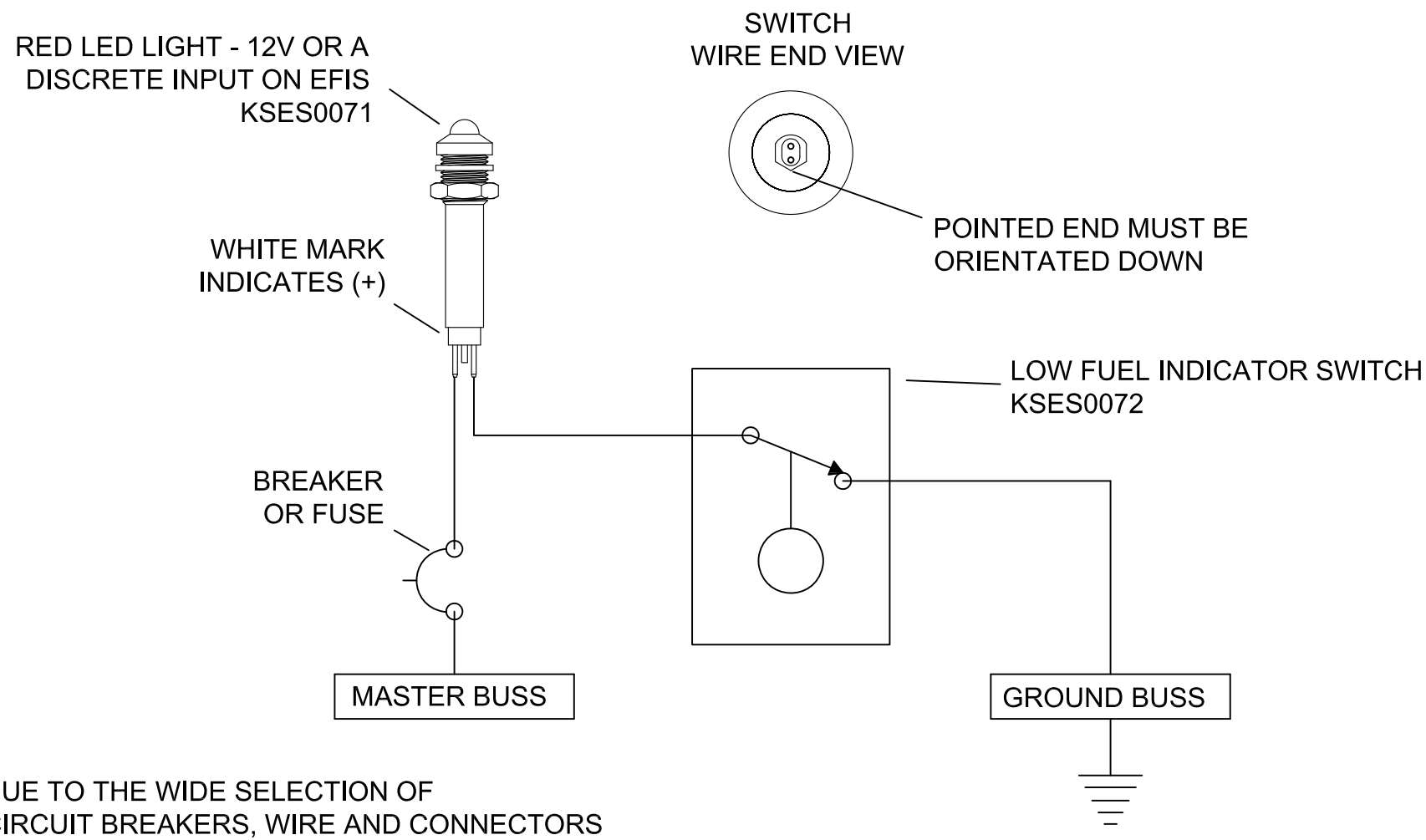


DUE TO THE WIDE SELECTION OF
CIRCUIT BREAKERS, WIRE AND CONNECTORS
WHICH MAY BE USED TO CUSTOMIZE YOUR
AIRCRAFT. THESE ITEMS ARE "BUILDER SUPPLIED"

09/11/2018

# RANS S-21 OUTBOUND
## ROTAX 915iS
## LOW FUEL WARNING SYSTEM WIRING
## FIGURE 11-03G/915iS

MD5660
REV. - ORIG

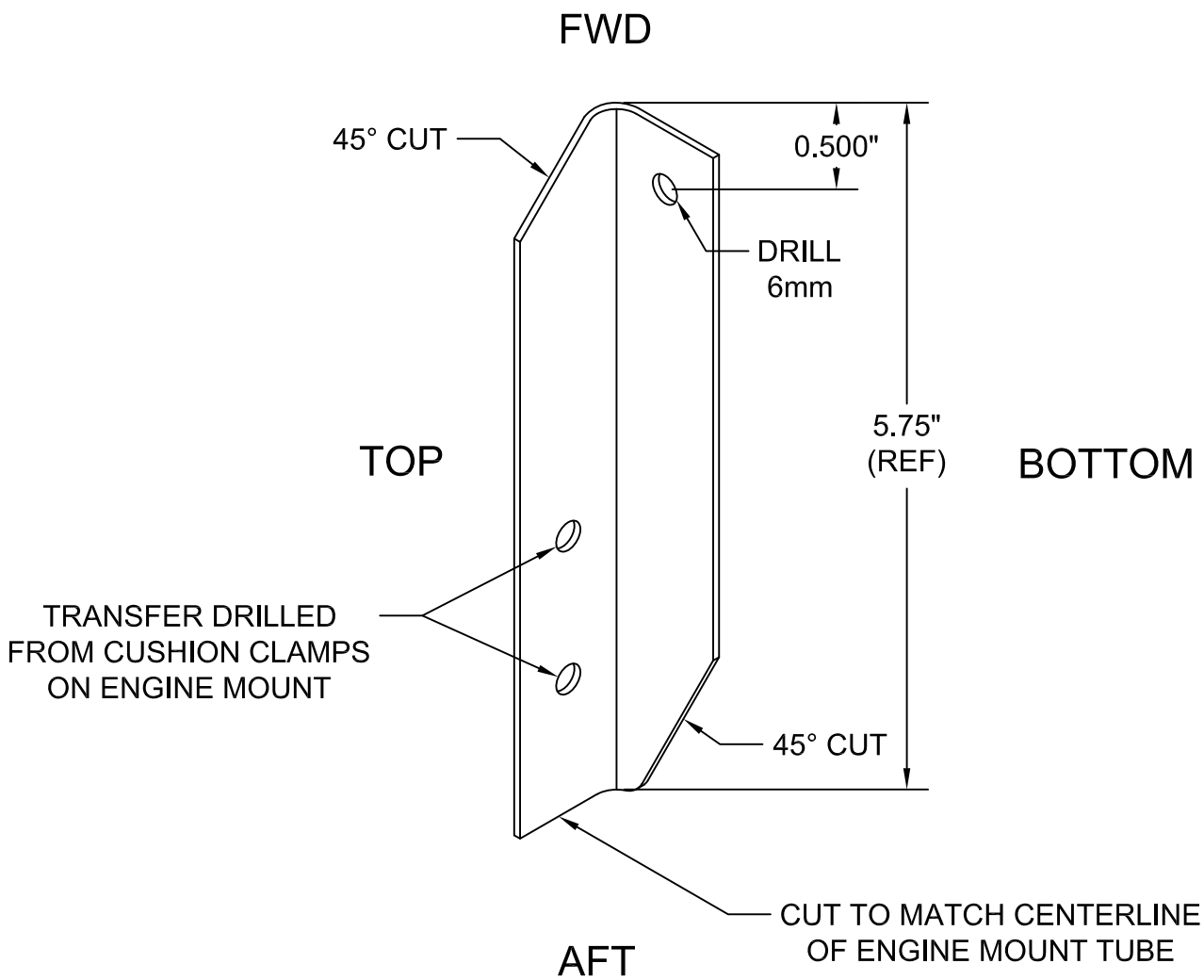


(REMOVE ALL SHARP CORNERS)

MD5660
REV. - ORIG

RANS S-21 OUTBOUND
INTERCOOLER MOUNTING LOCATION
FIGURE 11-05/915iS

09/11/2018

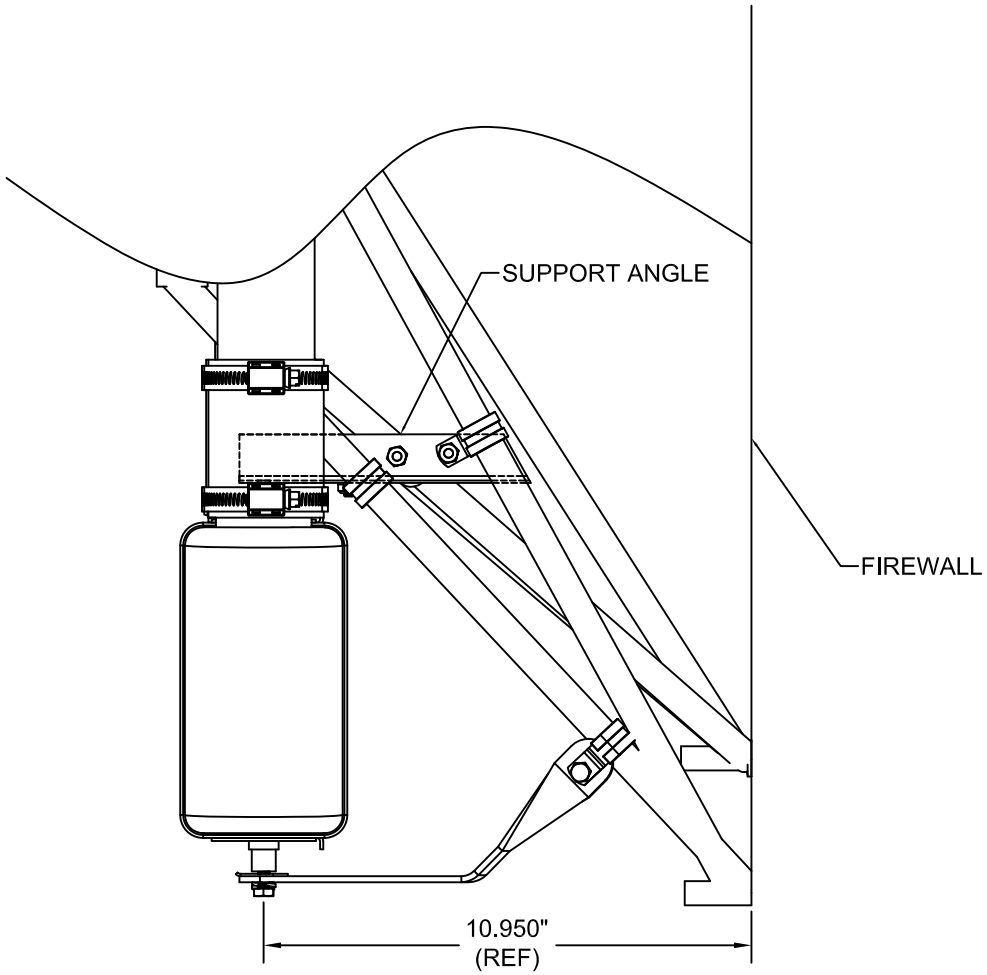


RANS S-21 OUTBOUND

ROTAX 915iS

INTERCOOLER MOUNTING LOCATION

FIGURE 11-05A/915iS

MD5660
REV. - ORIG

09/11/2018

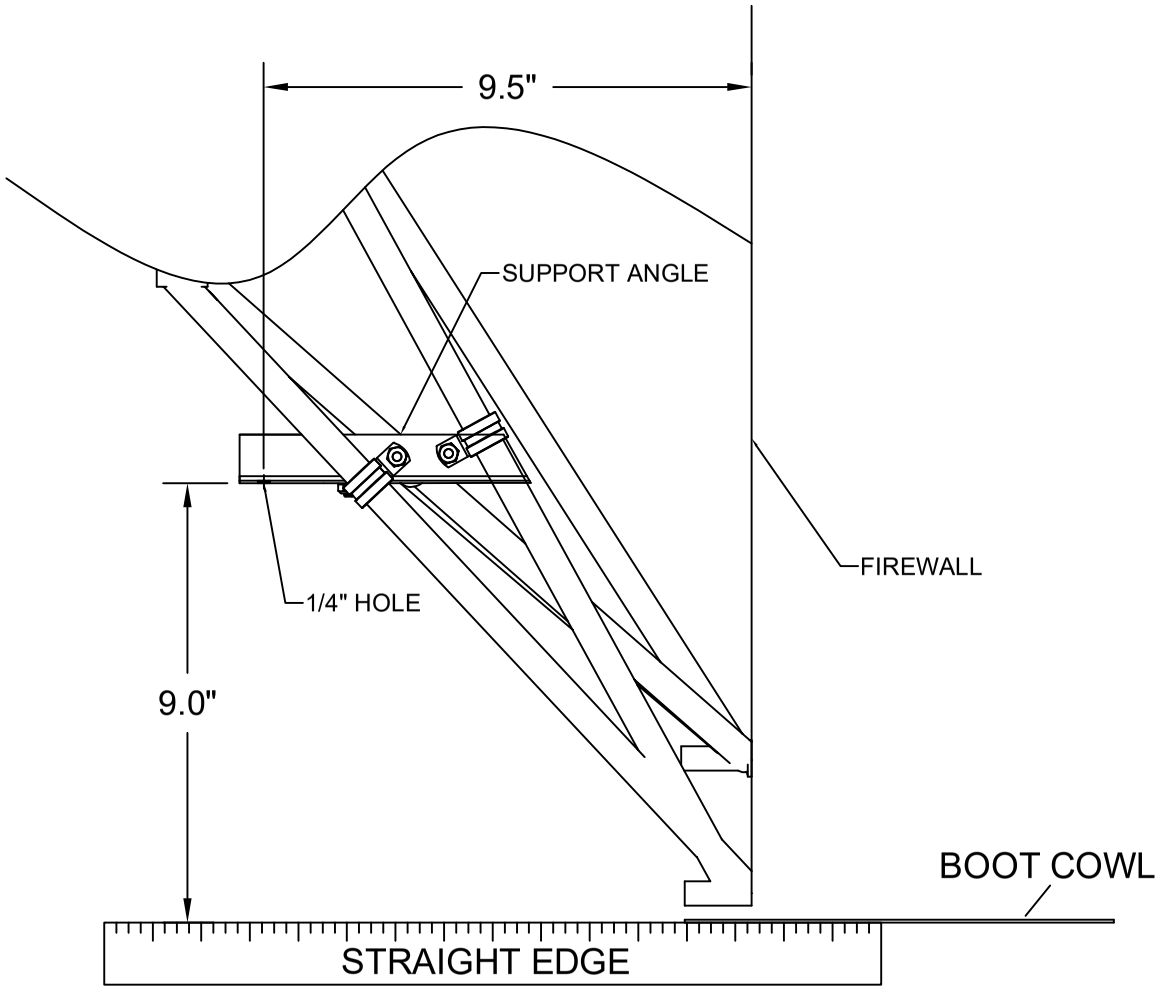


RANS S-21 OUTBOUND

ROTAX 915iS

UPPER INBOARD INTERCOOLER MOUNT

FIGURE 11-05A1/915iS

MD5660
REV. - ORIG

09/11/2018

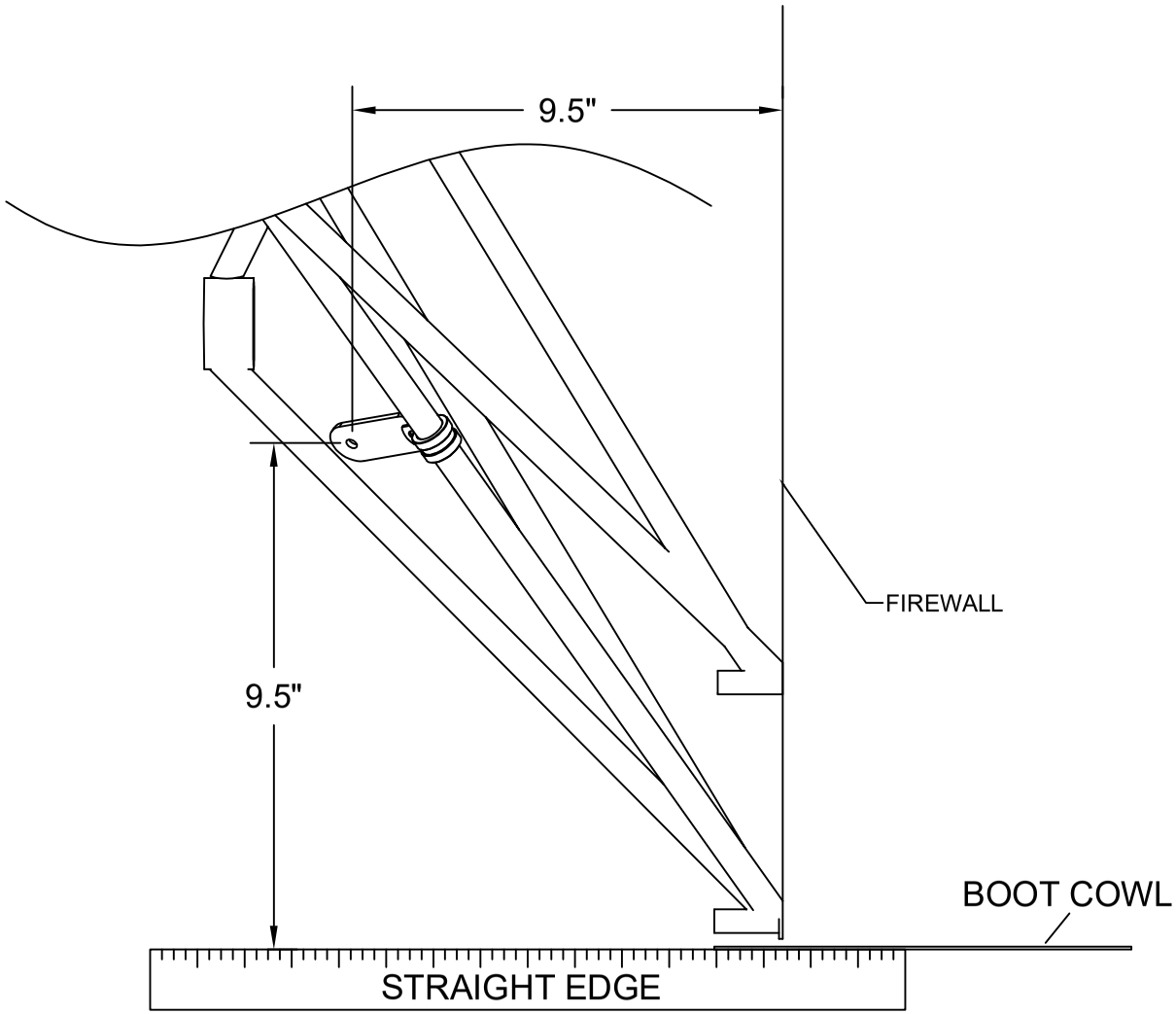


RANS S-21 OUTBOUND

ROTAX 915iS

LOWER INBOARD INTERCOOLER MOUNT

FIGURE 11-05A2/915iS

MD5660
REV. - ORIG

09/11/2018

## UPPER INDUCTION SILICONE HOSES

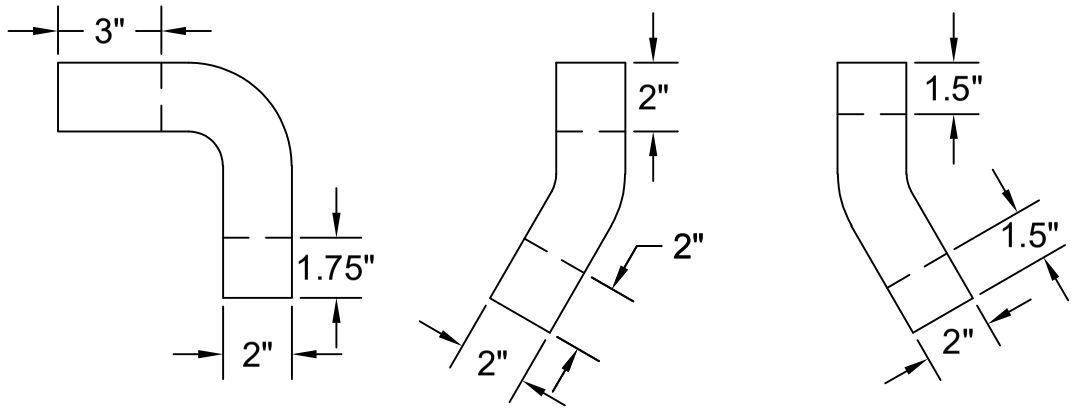


## LOWER INDUCTION SILICONE HOSE

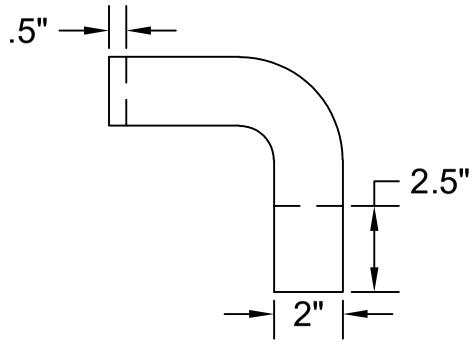


## AIR FILTER

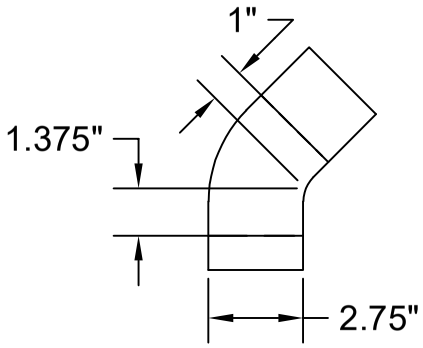


RANS S-21 OUTBOUND
ROTAX 915iS
INDUCTION SILICONE HOSE MODIFICATION
FIGURE 11-05B/915iS

09/11/2018

MD5660
REV. - ORIG

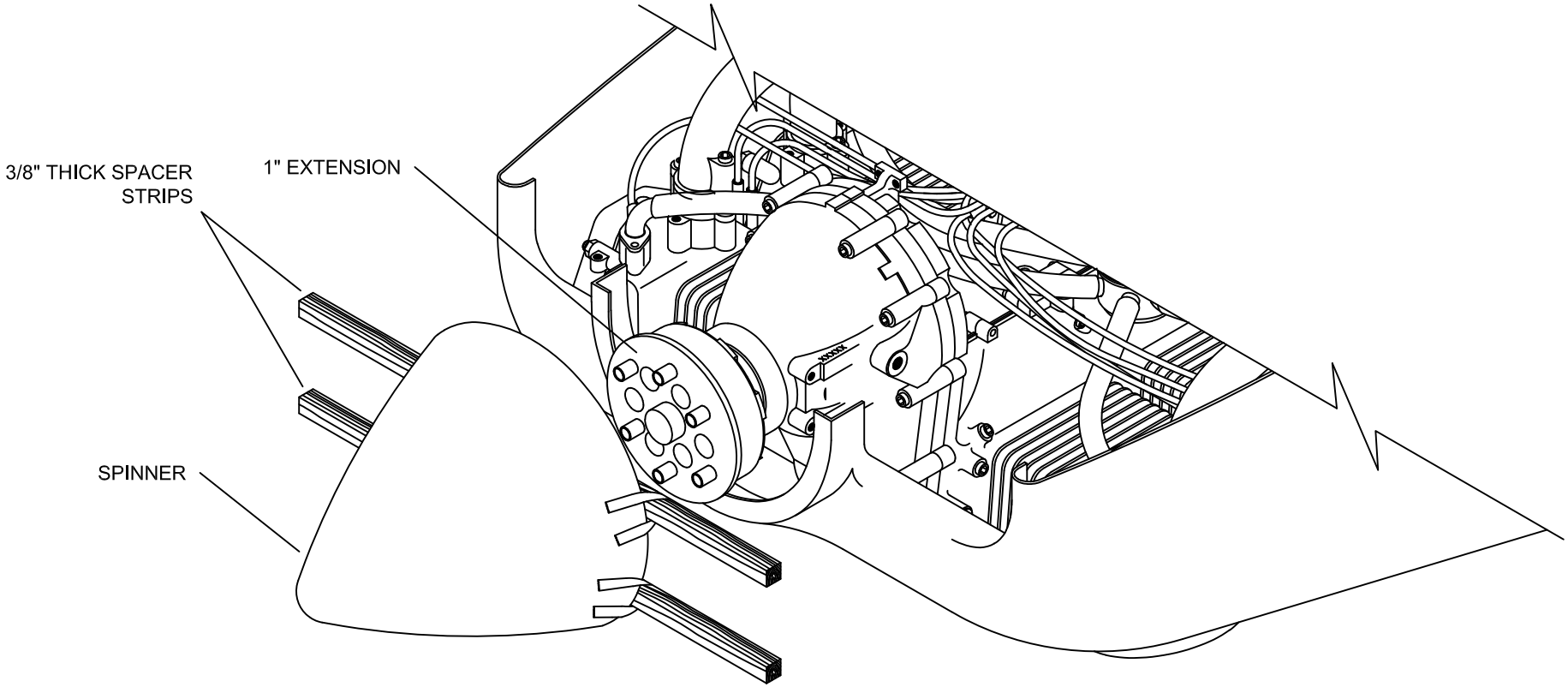


IMPORTANT: INSTALLATION OF COWLING REQUIRES ENGINE, PROP EXTENSION AND SPINNER BACKING PLATE TO BE INSTALLED.

MD5660
REV. - ORIG

RANS S-21 OUTBOUND
ROTAX 915iS
COWLING TO SPINNER SPACING
FIGURE 11-07/915iS

09/11/2018

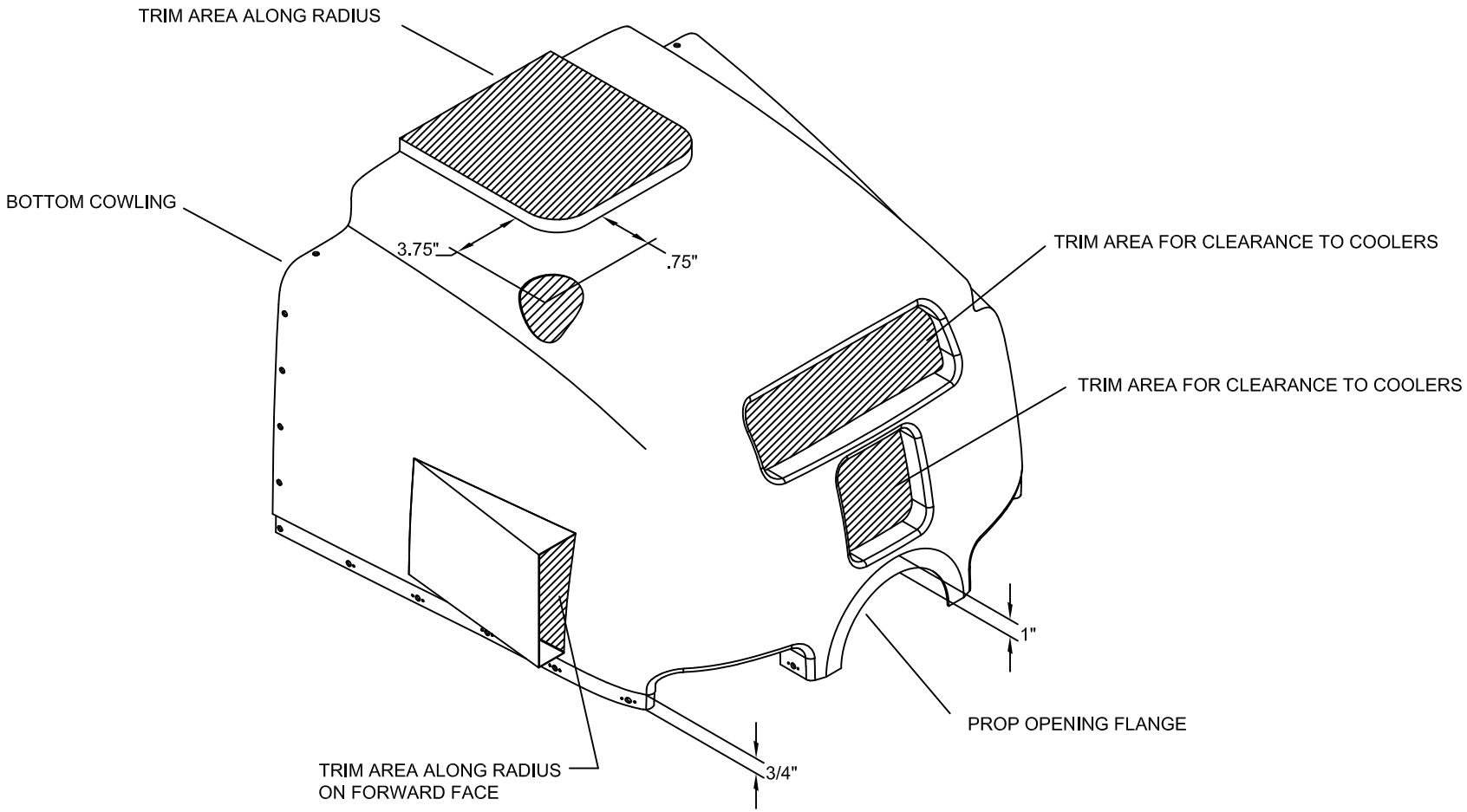


RANS S-21 OUTBOUND
ROTAX 915iS
BOTTOM COWLING MODIFICATION
FIGURE 11-07A/915iS

MD5660
REV. A

09/11/2018

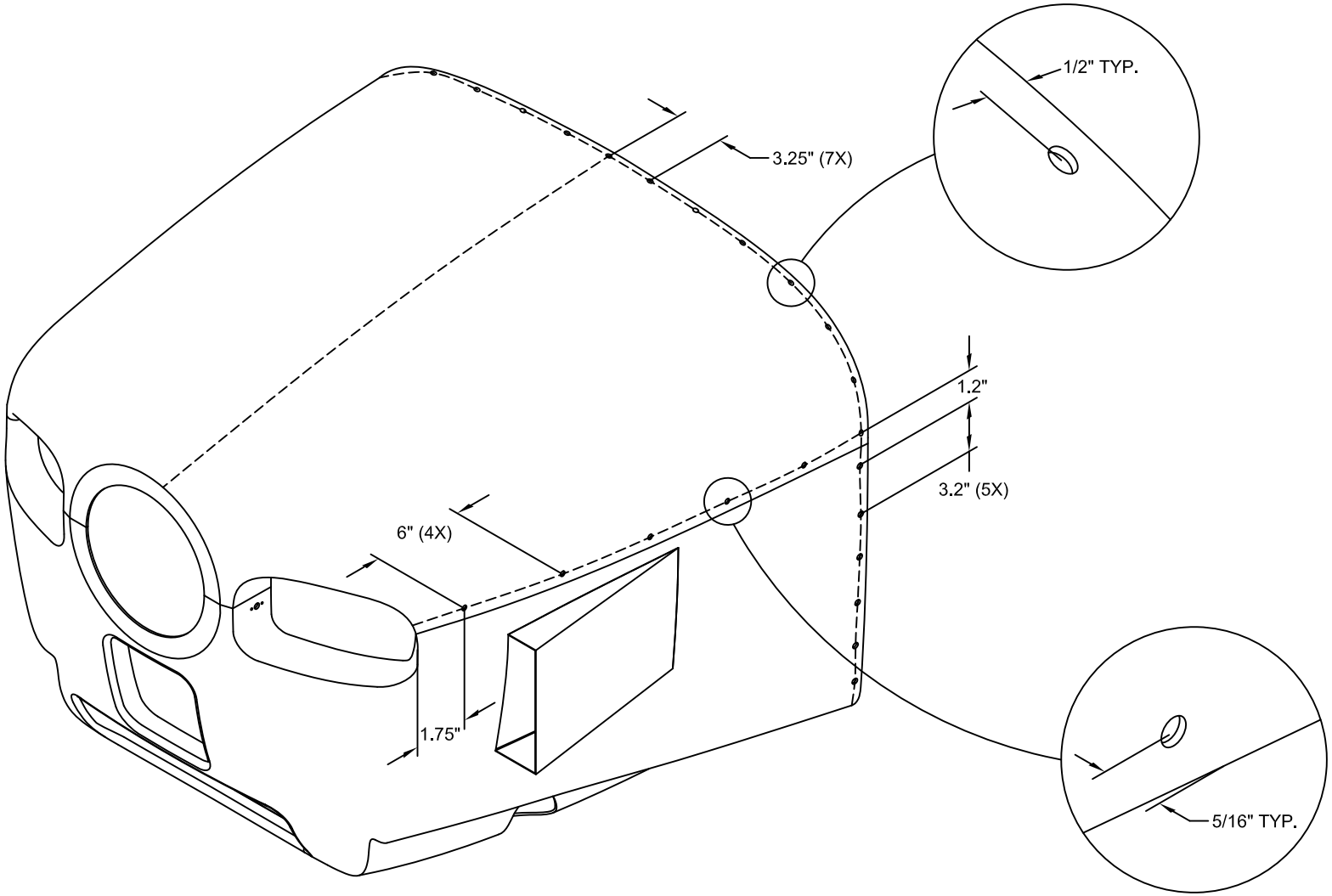


RANS S-21 OUTBOUND
ROTAX 915iS
COWLING FASTENER SPACING
FIGURE 11-07B/915iS

MD5660
REV. A

09/11/2018

# 1 TO 1 TEMPLATE

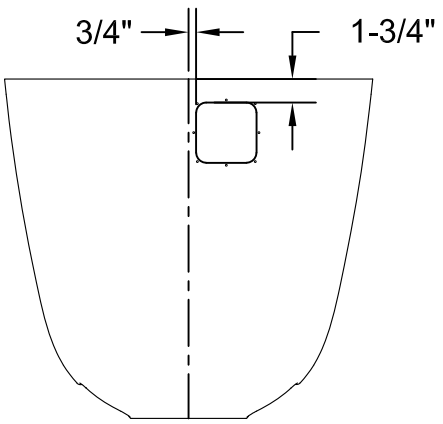


MEASUREMENTS AFTER FINAL COWLING TRIM

COMPARE TEMPLATE TO:
REINFORCEMENT RING
(KPCW0015)
TO VERIFY 1:1

MD5660
REV. - ORIG

RANS S-21 OUTBOUND
OIL CHECK DOOR TEMPLATE
FIGURE 11-07C/915iS

09/11/2018

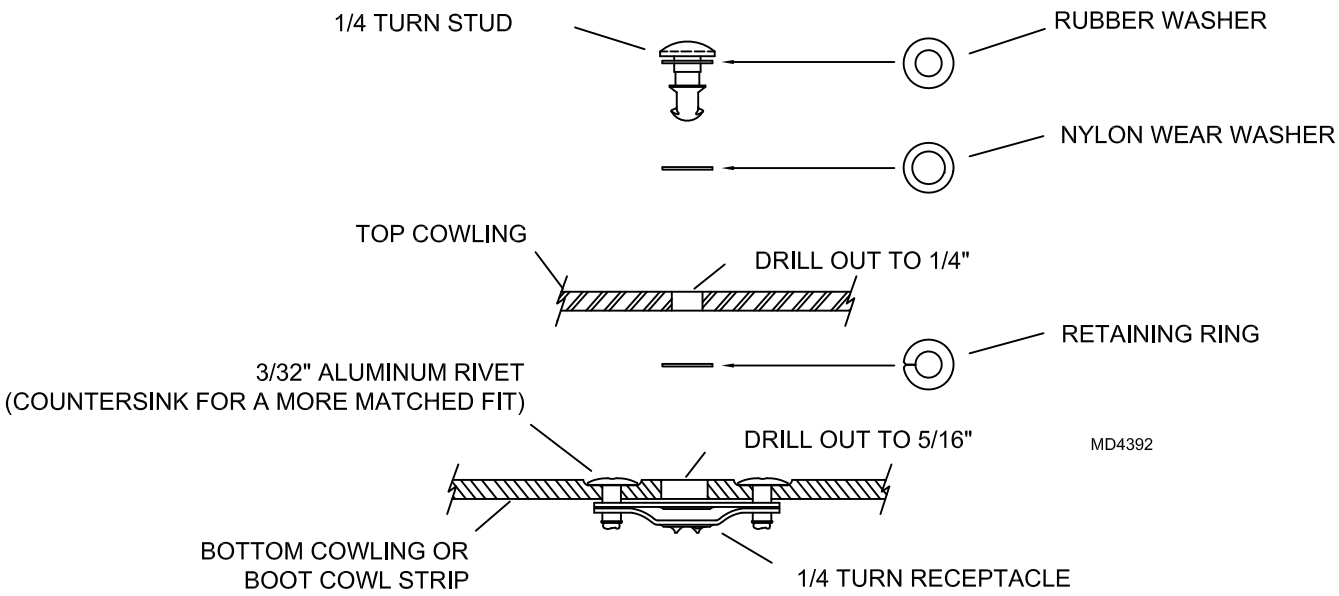


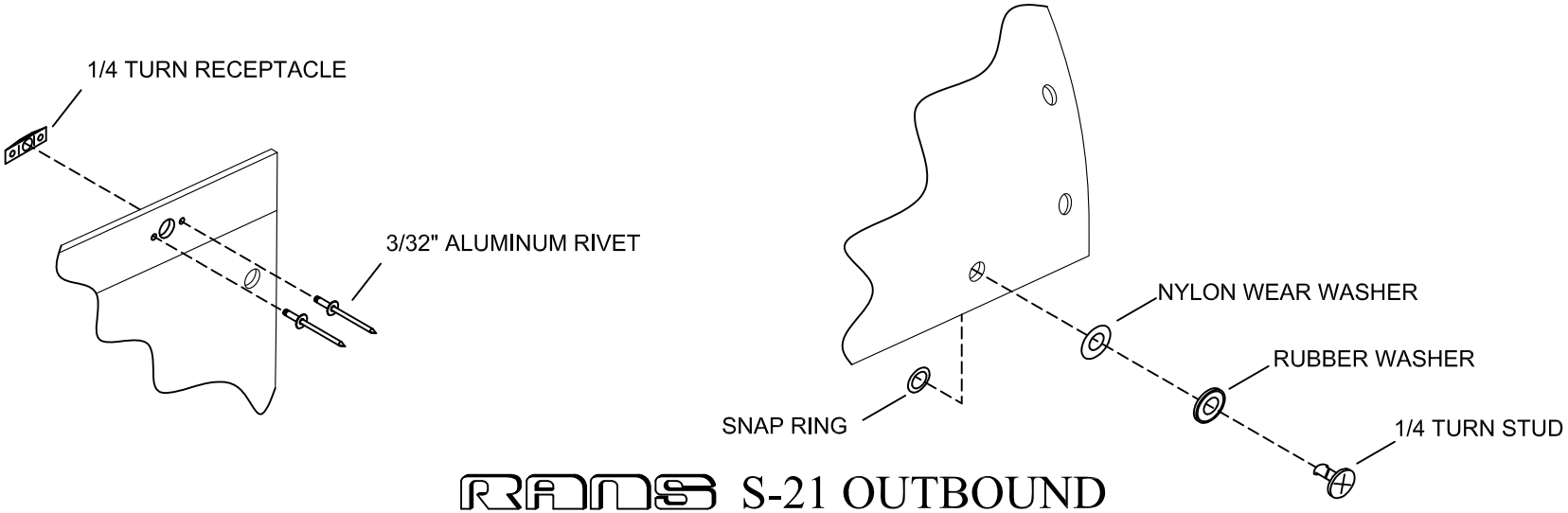


# RANS S-21 OUTBOUND
# ROTAX 915iS
# 1/4 TURN FASTENER INSTALLATION
# FIGURE 11-07D/915iS

MD5660
REV. - ORIG

09/11/2018

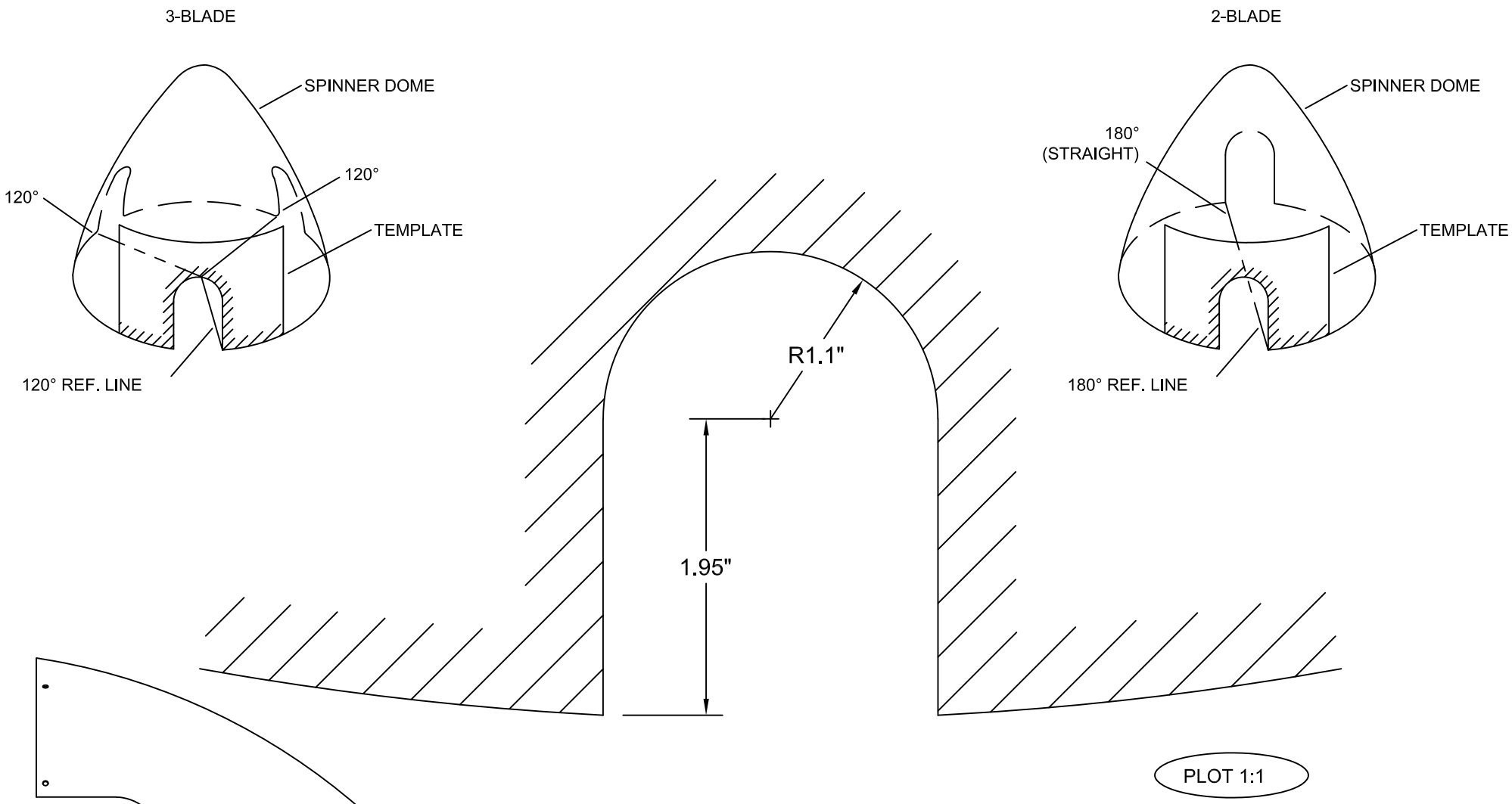


RANS S-21 OUTBOUND

ROTAX 915iS

WHIRL WIND PROP - 11.3" SPINNER TEMPLATE

FIGURE 11-08/915iS

MD5660
REV. - ORIG

09/11/2018

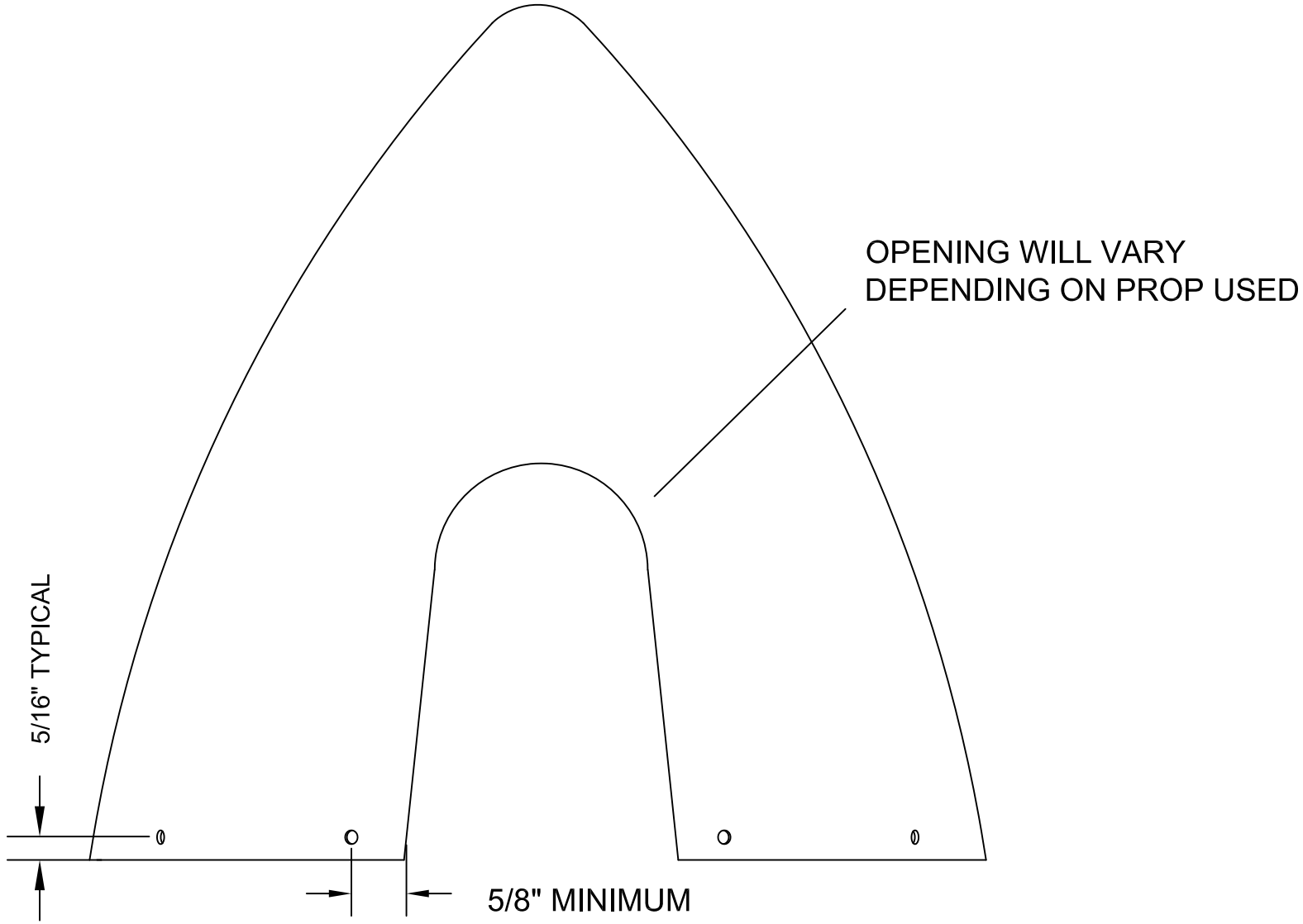


RANS S-21 OUTBOUND
ROTAX 915iS
SPINNER DRILLING
FIGURE 11-08A/915iS

MD5660
REV. - ORIG

09/11/2018

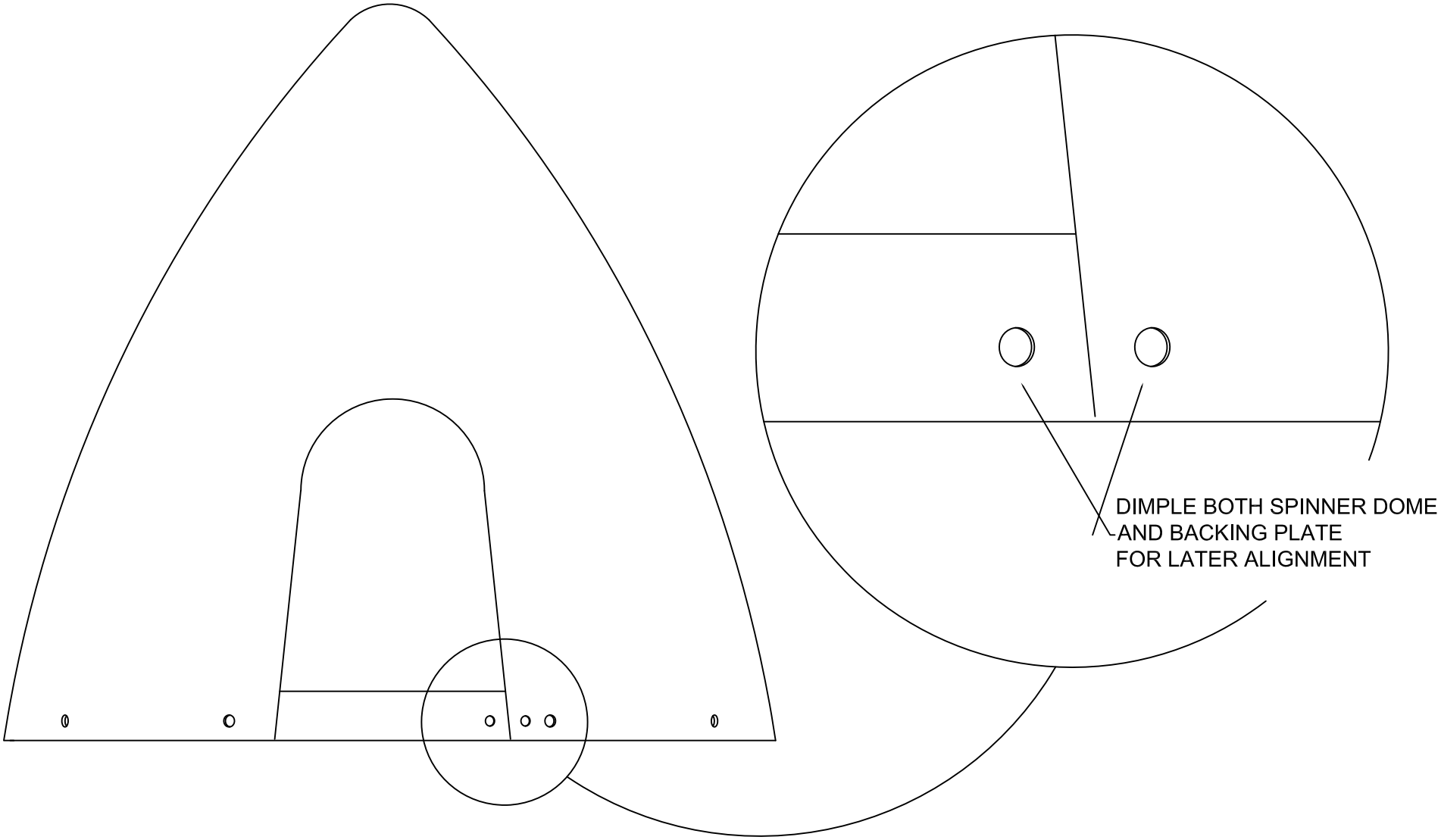


RANS S-21 OUTBOUND
ROTAX 915iS
SPINNER ALIGNMENT MARKS
FIGURE 11-08B/915iS

MD5660
REV. - ORIG

09/11/2018

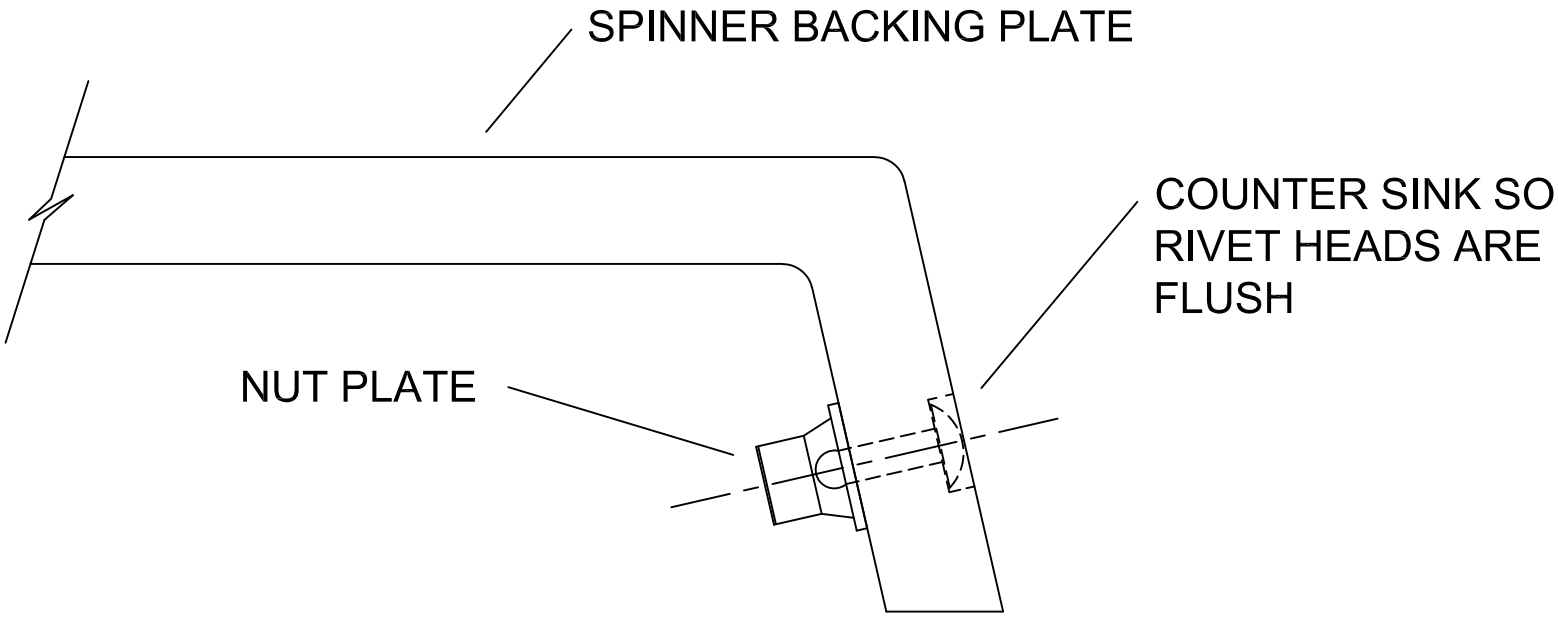


RANS S-21 OUTBOUND
ROTAX 915iS
SPINNER NUT PLATE INSTALLATION
FIGURE 11-08C/915iS

MD5660
REV. - ORIG

09/11/2018

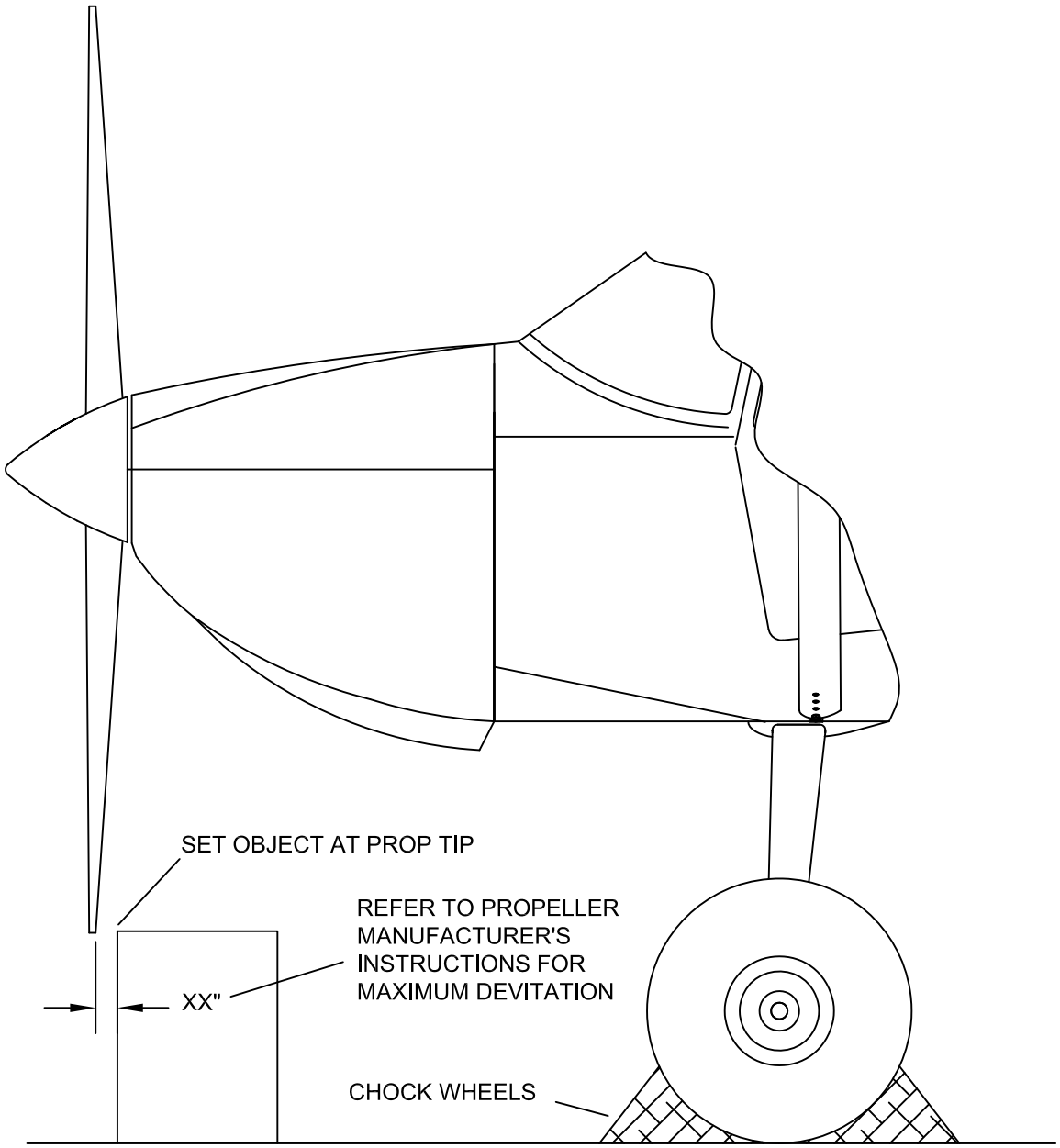


**IMPORTANT!**

RE-CHECK PROPELLER TORQUE PER MANUFACTURE'S RECOMMENDED INSPECTION INTERVAL. FAILURE TO MAINTAIN PROP TORQUE MAY RESULT IN SEPARATION OF THE PROPELLER FROM THE AIRCRAFT AND MAY CAUSE INJURY OR DEATH. REFER TO PROPELLER MANUFACTURER'S INSTRUCTIONS FOR ANY SPECIAL MAINTENANCE REQUIREMENTS.

RANS S-21 OUTBOUND
ROTAX 915iS
PROPELLER TRACKING
FIGURE 11-09/915iS

MD5660
REV. - ORIG

09/11/2018