S-21 OUTBOUND

TITAN X-340 INSTALLATION
PARTS MANUAL

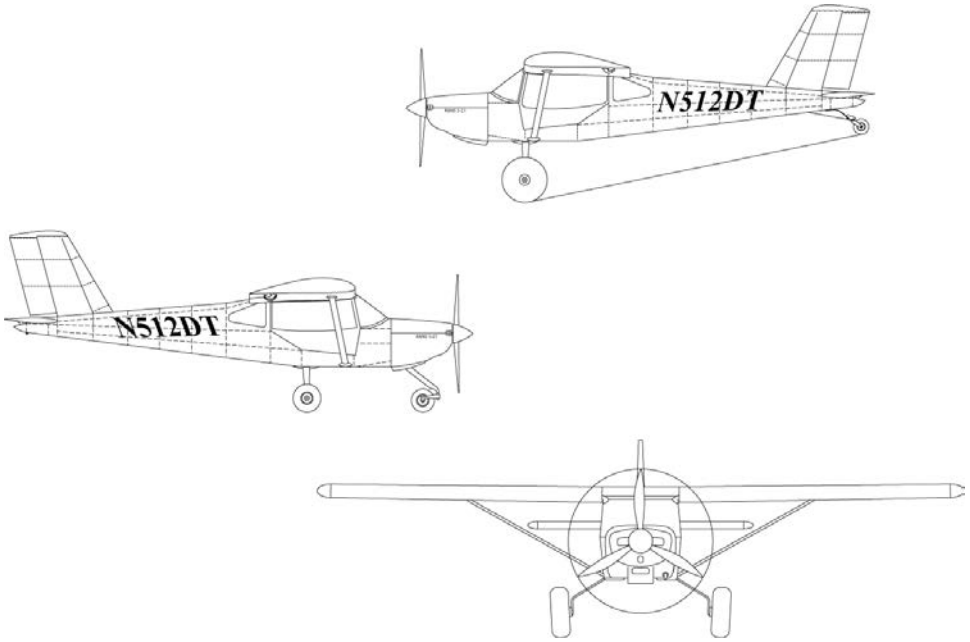

Serial Number: _____

Registration Number: _____

COPYRIGHT © 2017
RANS DESIGNS
4600 HWY 183 Alt
HAYS, KANSAS, USA 67601
785-625-6346
WWW.RANS.COM

This manual conforms to FAA Evaluated date 9/11/2018

STEP 1:

PARTS MANUAL AS SHIPPED or PRINTED.
PLACE IN 3-RING BINDER TO SECURE.

PARTS DRAWING PAGE

3-HOLE PUNCH

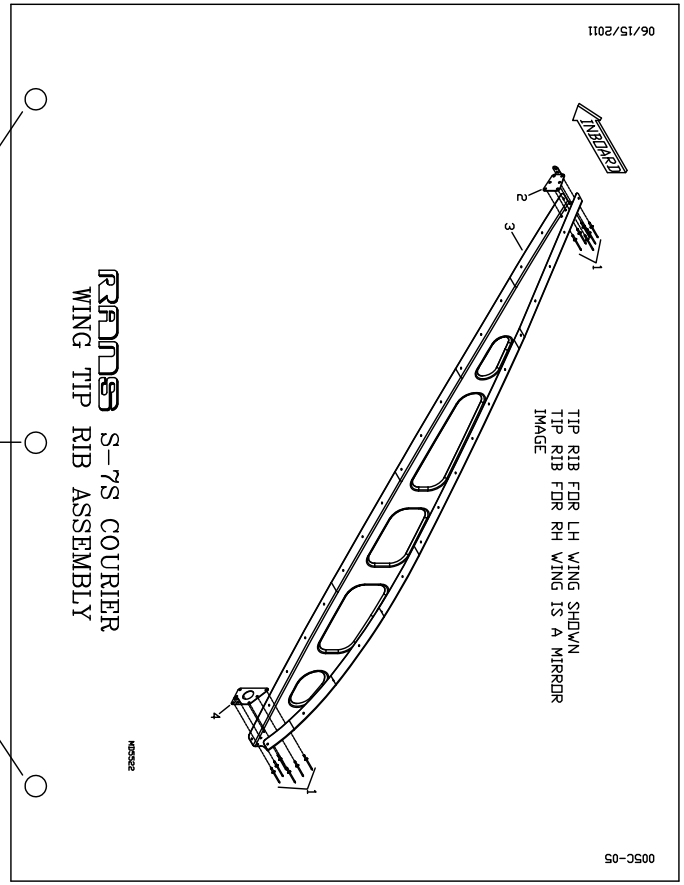

EXAMPLE ONLY.
MAY NOT REPRESENT ACTUAL PAGES
FROM YOUR MANUAL.

SEE NEXT PAGE

STEP 2:

OPEN 3-RING BINDER.
REMOVE PARTS DRAWING PAGE AND
ROTATE 180° TO FACE
CORRESPONDING
PARTS DESCRIPTION PAGE.
REPEAT FOR REMAINING PAGES

PARTS DRAWING PAGE

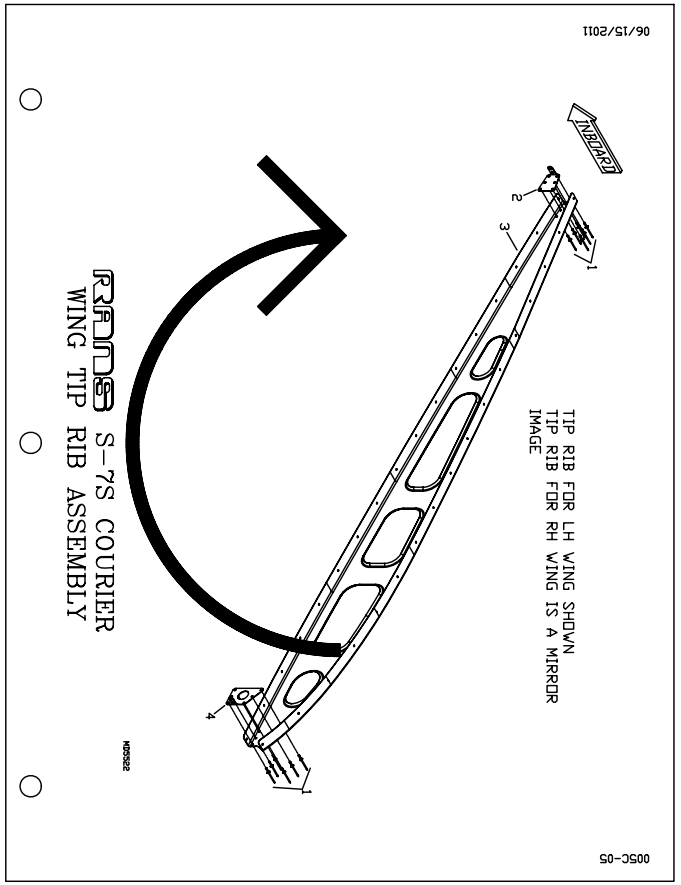

PARTS DESCRIPTION PAGE

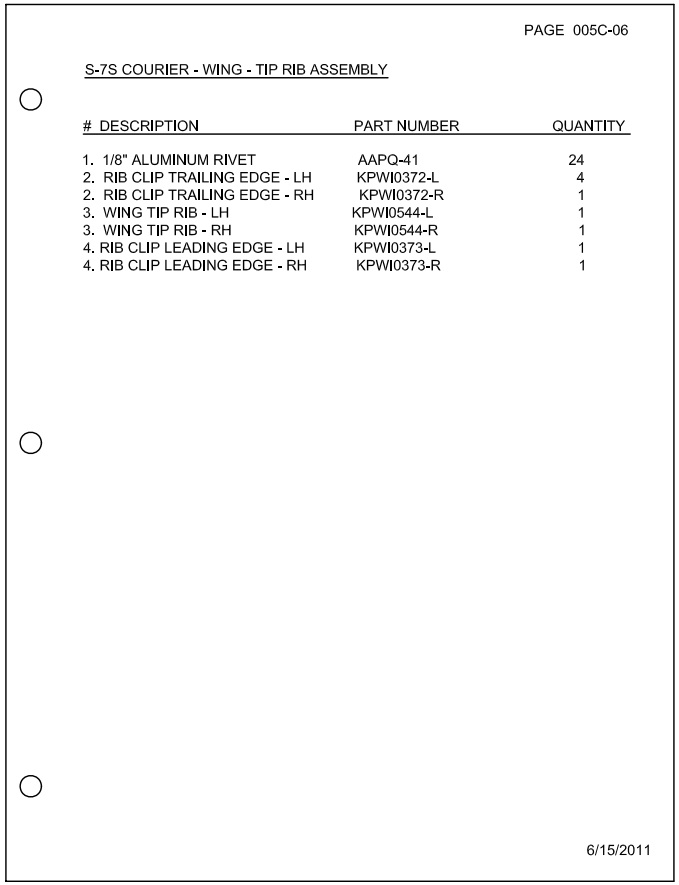

EXAMPLE ONLY.
MAY NOT REPRESENT ACTUAL PAGES
FROM YOUR MANUAL.

SEE NEXT PAGE

STEP 3:

PARTS DRAWING PAGE
FACES CORRESPONDING
PARTS DESCRIPTION PAGE
WHEN FINAL SECURED IN
BINDER

PARTS DRAWING PAGE

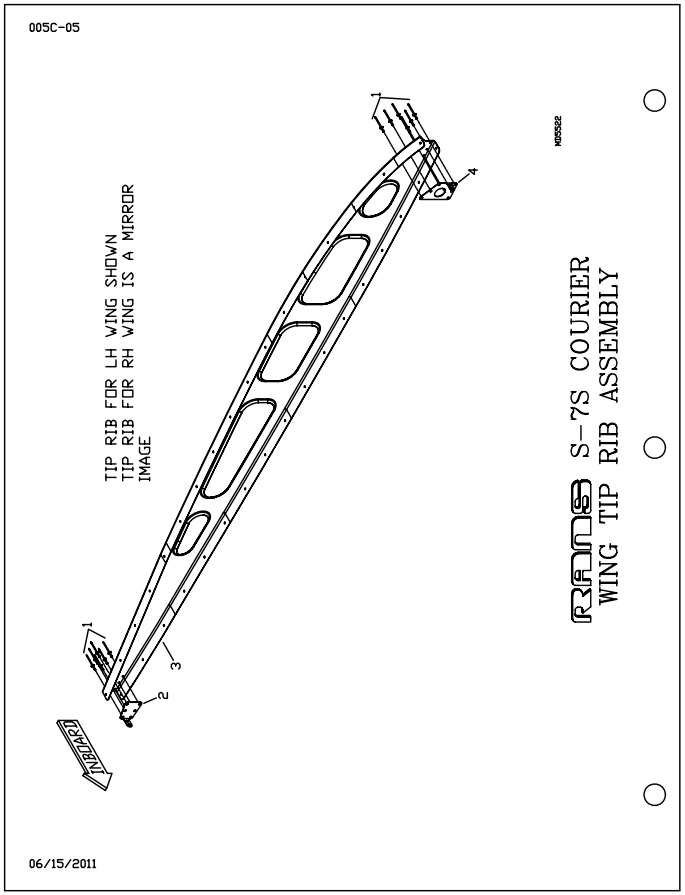

PARTS DESCRIPTION PAGE

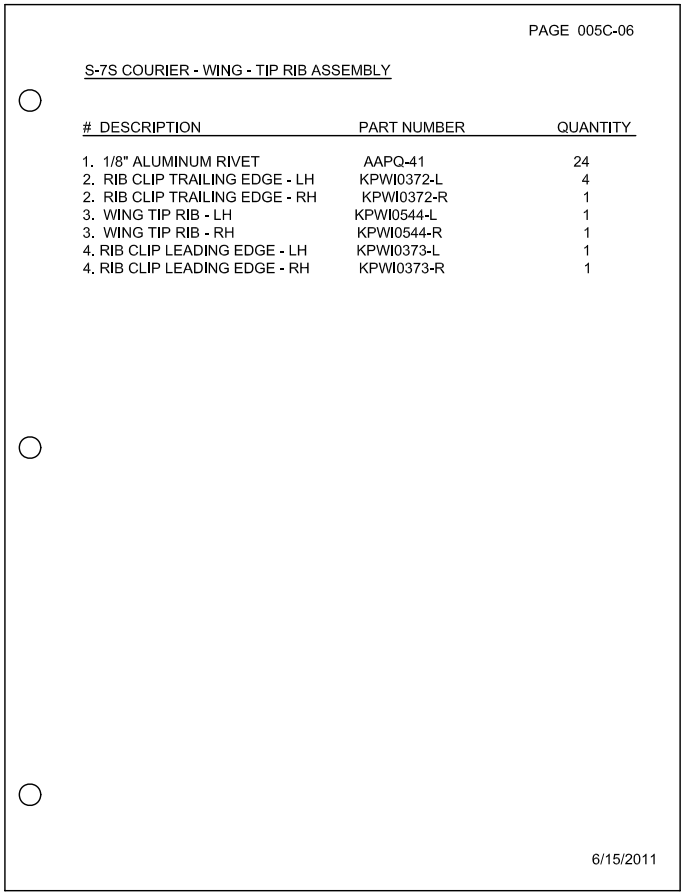

PAGE 005C-06

S-7S COURIER - WING - TIP RIB ASSEMBLY

#	DESCRIPTION	PART NUMBER	QUANTITY
1.	1/8" ALUMINUM RIVET	AAPQ-41	24
2.	RIB CLIP TRAILING EDGE - LH	KPWI0372-L	4
2.	RIB CLIP TRAILING EDGE - RH	KPWI0372-R	1
3.	WING TIP RIB - LH	KPWI0544-L	1
3.	WING TIP RIB - RH	KPWI0544-R	1
4.	RIB CLIP LEADING EDGE - LH	KPWI0373-L	1
4.	RIB CLIP LEADING EDGE - RH	KPWI0373-R	1

6/15/2011

EXAMPLE ONLY.
MAY NOT REPRESENT ACTUAL PAGES
FROM YOUR MANUAL.

RANS S-21 OUTBOUND – TITAN X340
PARTS MANUAL
TABLE OF CONTENTS

TITAN X-340 - ENGINE MOUNT INSTALLATION ---------- 011-01 / TITAN340
TITAN X-340 - ENGINE ELECTRICAL ACCESSORY INSTALLATION ---------- 011A-01 / TITAN340
TITAN X-340 - BATTERY BOX ASSEMBLY & INSTALLATION ---------- 011A-03 / TITAN340
TITAN X-340 - FUEL SYSTEM - FIREWALL FORWARD ---------- 011B-01 / TITAN340
TITAN X-340 - FUEL SYSTEM - FUSELAGE ---------- 011B-03 / TITAN340
TITAN X-340 - FUEL SYSTEM - HEADER TANK ---------- 011B-05 / TITAN340
TITAN X-340 - FUEL SYSTEM - ELECTRIC FUEL PUMP ---------- 011B-07 / TITAN340
TITAN X-340 - BAFFLE - RIGHT INSTALLATION ---------- 011C-01 / TITAN340
TITAN X-340 - BAFFLE - LEFT INSTALLATION ---------- 011C-03 / TITAN340
TITAN X-340 - LUBRICATION SYSTEM ASSEMBLY & INSTALLATION ---------- 011D-01 / TITAN340
TITAN X-340 - CROSS-OVER EXHAUST ASSEMBLY ---------- 011E-01 / TITAN340
TITAN X-340 - CABIN HEATER INSTALLATION ---------- 011E-03 / TITAN340
TITAN X-340 - THROTTLE ASSEMBLY ---------- 011F-01 / TITAN340
TITAN X-340 - MIXTURE CONTROL ASSEMBLY ---------- 011G-01 / TITAN340
TITAN X-340 - AIRBOX ASSEMBLY ---------- 011H-01 / TITAN340
TITAN X-340 - ENGINE ELECTRICAL ---------- 011I-01 / TITAN340
TITAN X-340 - ANALOG INSTRUMENTS & ELECTRICAL ---------- 011I-03 / TITAN340
TITAN X-340 - OPTIONS - REMOTE CHARGING POST ---------- 011I-05 / TITAN340
TITAN X-340 - OPTIONS - IGNITION BACKUP BATTERY INSTALLATION ---------- 011I-07 / TITAN340
TITAN X-340 - 13" SPINNER ASSEMBLY ---------- 011J-01 / TITAN340
TITAN X-340 - COWLING ASSEMBLY & INSTALLATION ---------- 011K-01 / TITAN340
TITAN X-340 - OIL CHECK DOOR INSTALLATION ---------- 011K-03 / TITAN340
TITAN X-340 - WHIRLWIND PROPELLER INSTALLATION ---------- 011L-01 / TITAN340

* REFER TO BOOT COWL ASSEMBLY FOR FIREWALL ASSEMBLY.

** REFER TO TRIKE – NOSE GEAR INSTALL

NOT ALL DUPLICATED HARDWARE SHOWN FOR CLARITY

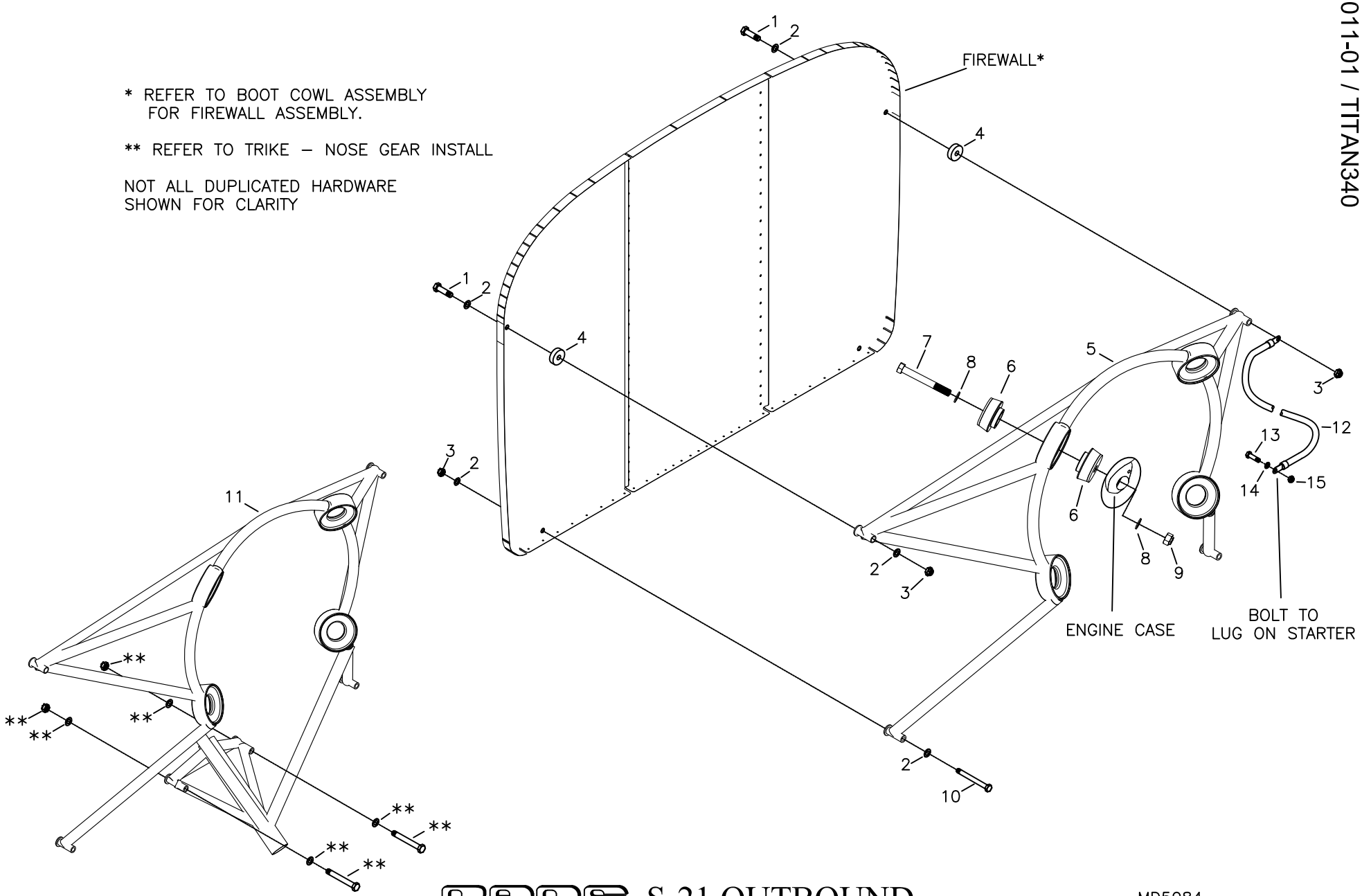

RANS S-21 OUTBOUND
TITAN X-340
ENGINE MOUNT INSTALLATION

MD5084
REV. – ORIG

RANS S-21 OUTBOUND

TITAN X-340 - ENGINE MOUNT INSTALLATION

#	DESCRIPTION	PART NUMBER	QUANTITY
1 .	5/16" Bolt	AN5-37A	2
2 .	5/16" Thick Washer	AN960-516	7
3 .	5/16" Tensile Nut	AN365-524A	4
4 .	Engine Mount Spacer	KPAC0273	2
5 .	Engine Mount (TAILDRAGGER ONLY)	KAPW0072	1
6 .	Rubber Engine Mount	KSPW0097	4
7 .	7/16" Bolt	AN7-35A	4
8 .	7/16" Thick Washer	AN960-716	8
9 .	7/16" Tensile Nut - Steel	MS20365-720C	4
10 .	5/16" Bolt	AN5-34A	2
11 .	Engine Mount (TRIKE ONLY)	KAPW0074	1
12 .	Engine Ground Cable	KAES0023	1
13 .	1/4" Bolt	AN4-7A	1
14 .	1/4" Thin Washer	AN960-416L	1
15 .	1/4" Shear Nut	AN364-428C	1

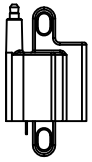

MOUNTING SYSTEM FOR CENTER
LINE MOUNT IGNITION COILS ONLY

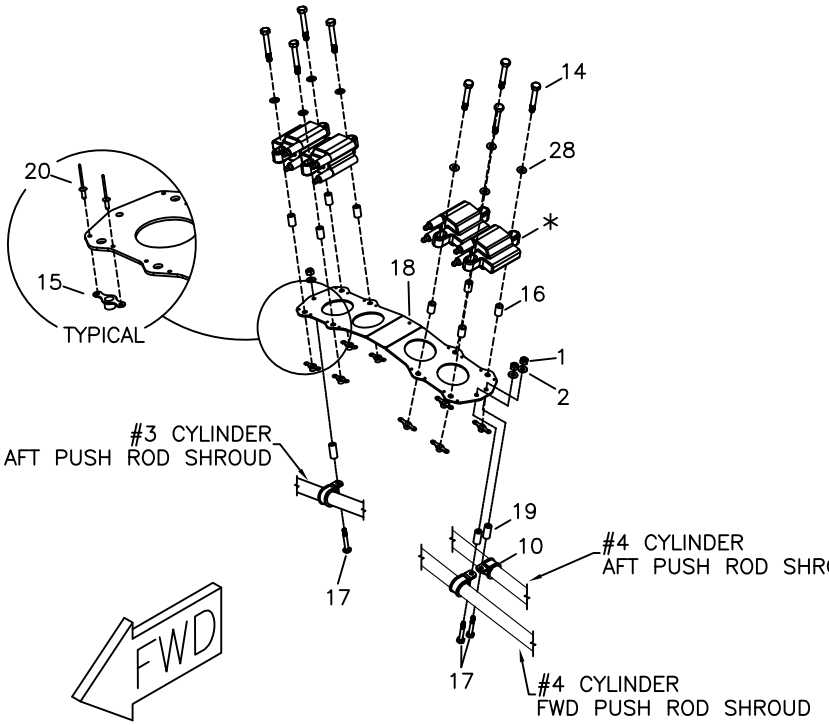

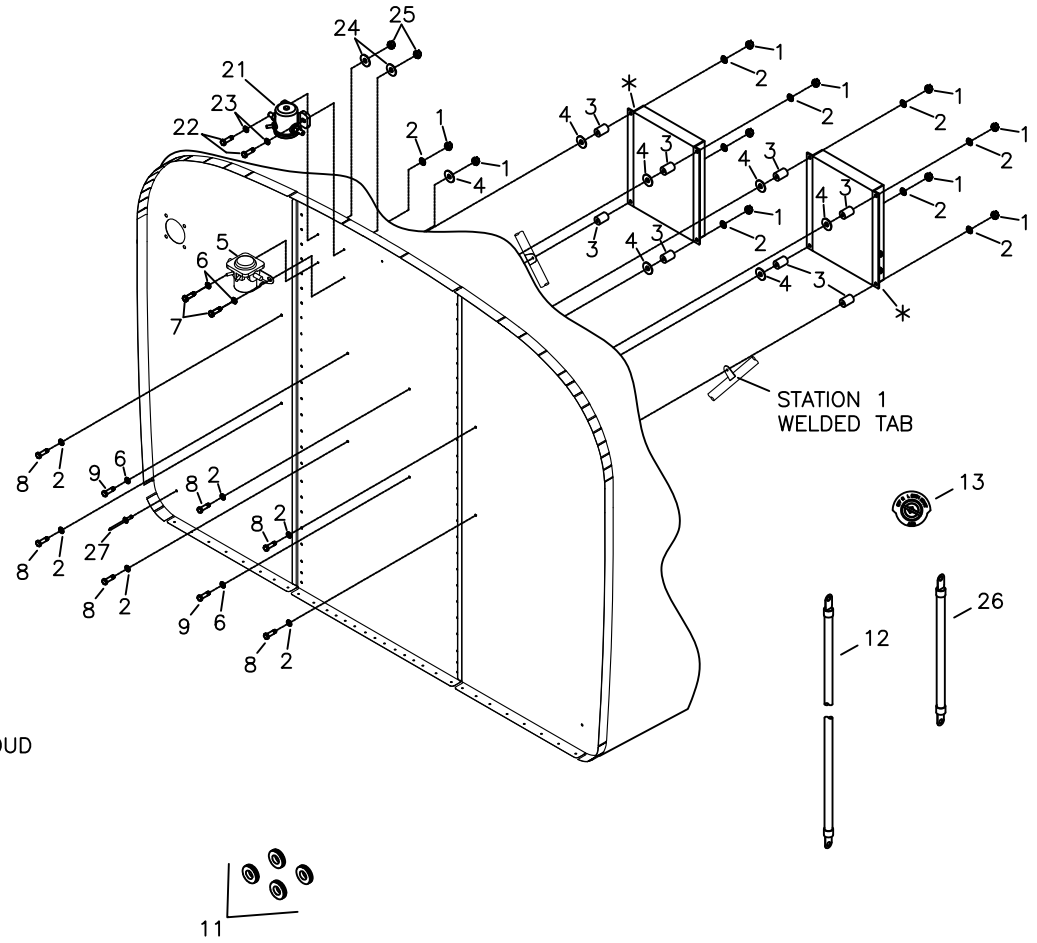

SOME DUPLICATED ASSEMBLY ITEMS NOT NUMBERED

* Items provided with LIGHTSPEED Ignition System

RANS S-21 OUTBOUND
TITAN X-340
ENGINE ELECTRICAL ACCESSORY INSTALLATION

MD5135
REV. C

RANS S-21 OUTBOUND

TITAN X-340 - ENGINE ELECTRICAL ACCESSORY INSTALLATION

#	DESCRIPTION	PART NUMBER	QUANTITY
1.	3/16" Shear Nut	AN364-1032A	13
2.	3/16" Thin Washer	AN960-10L	18
3.	Aluminum Bushing - 3/8" x .095" x .50" *	KPST0132	1
4.	3/16" Large Washer	AN970-3	7
5.	Starter Solenoid	KSPW0040	1
6.	3/16" Thick Washer	AN960-10	4
7.	3/16" Bolt	AN3-4A	2
8.	3/16" Bolt	AN3-10A	6
9.	3/16" Bolt	AN3-7A	2
10.	3/4" Cushion Clamp	MS21919-DG12	3
11.	3/16" Rubber Grommet	KSAC0002	4
12.	Solenoid / Starter Cable	KAES0025	1
13.	Switch - Ignition	KSES0027	1
14.	1/4" Bolt	AN4-16A	8
15.	1/4" Nut Plate	MS21047-4	8
16.	Aluminum Bushing - 3/8" x .058" x .60" *	KAAC0044-3	1
17.	3/16" Bolt	AN3-12A	3
18.	Ignition Coil Mount Plate	KPPW0376	1
19.	Aluminum Bushing - 3/8" x .095" x .8125" *	KPST0132	0
20.	3/32" Aluminum Rivet	40APR1/8	16
21.	Master Solenoid	KSPW0140	1
22.	3/16" Bolt	AN3-5A	2
23.	3/16" Thick Washer	AN960-10	2
24.	3/16" Large Washer	AN970-3	2
25.	3/16" Shear Nut	AN364-1032A	2
26.	Master / Starter Solenoid Cable	KAES0029	1
27.	1/8" Stainless Steel Rivet - Cherry Q	CCPQ-41	1
28.	1/4" Thick Washer	AN960-416	8

* Builder Modifies

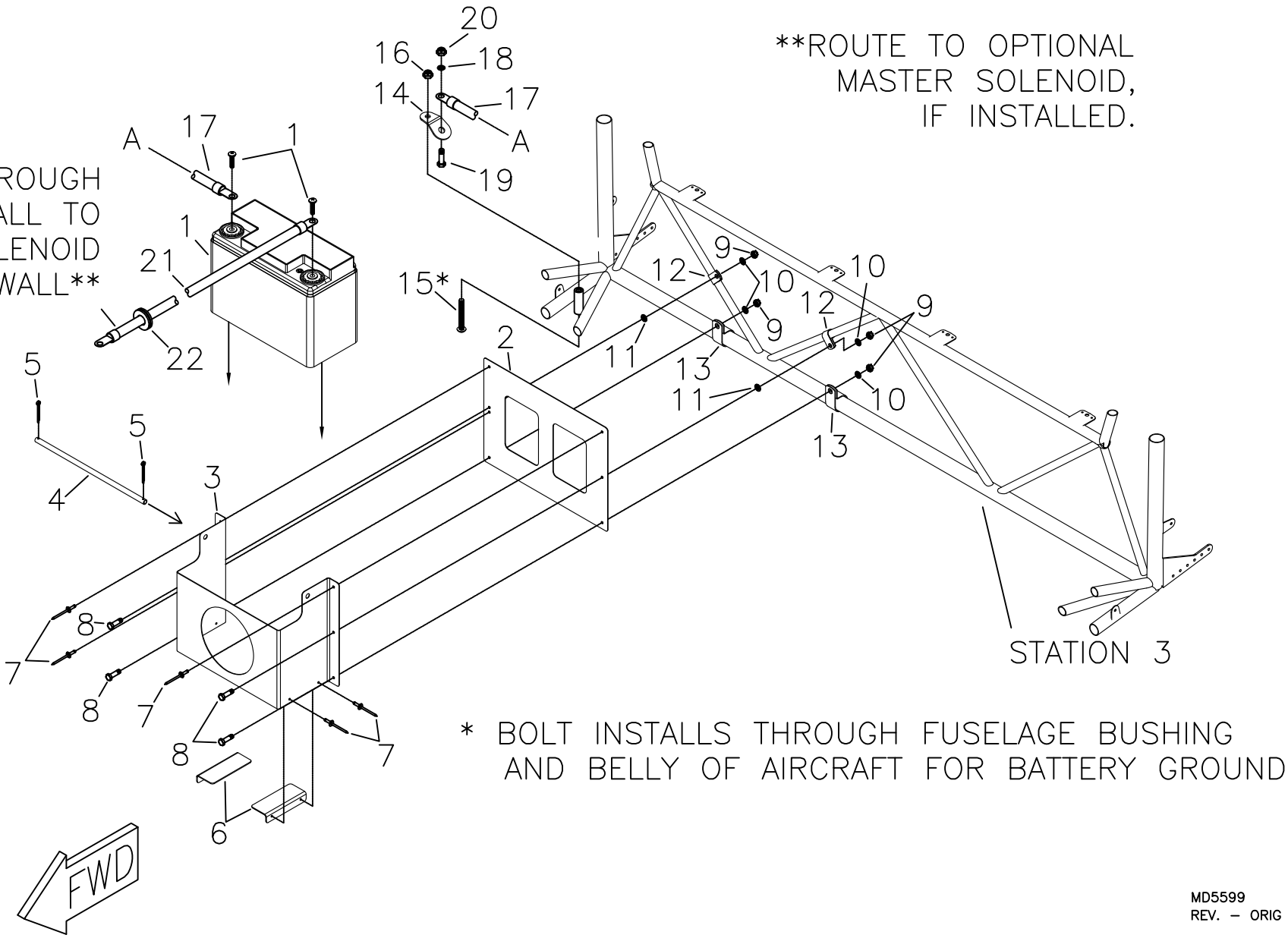

* BOLT INSTALLS THROUGH FUSELAGE BUSHING AND BELLY OF AIRCRAFT FOR BATTERY GROUND

MD5599
REV. – ORIG

RANS S-21 OUTBOUND
TITAN X-340
BATTERY BOX ASSEMBLY AND INSTALLATION

RANS S-21 OUTBOUND

TITAN X-340 - BATTERY BOX ASSEMBLY & INSTALLATION

#	DESCRIPTION	PART NUMBER	QUANTITY
1.	Battery - Odyssey PC-545MJ *	KSPW0103	0
2.	Battery Mount Plate	KPES0038	1
3.	Battery Box Front Plate	KPES0037	1
4.	Battery Bar **	BAT-BAR-503/582	1
5.	Small Cotter Pin	MS24665-134	2
6.	Battery Box Support Angle	BAT-BOX-3	2
7.	1/8" Stainless Steel Rivet - Cherry Q	CCPQ-42	7
8.	3/16" Bolt	AN3-3A	4
9.	3/16" Shear Nut	AN364-1032A	4
10.	3/16" Thin Washer	AN960-10L	4
11.	3/16" Thick Washer	AN960-10	2
12.	3/8" Plain Clamp	AN742-D6	2
13.	5/8" Plain Clamp	AN742-D10	2
14.	Tang	FAT-4	1
15.	1/4" Pan Head Bolt	KSHW0113	1
16.	1/4" Shear Nut - Steel	AN364-428C	1
17.	Battery / Ground Cable	KAES0028	1
18.	5/16" Thick Washer	AN960-516	1
19.	5/16" Bolt	AN5-5A	1
20.	5/16" Shear Nut - Steel	AN364-524C	1
21.	Battery / Solenoid Cable	KAES0024	1
22.	3/4" Rubber Grommet	MS35489-11	1

* May be purchased seperately, call RANS Parts Dept. for pricing
** Builder Modifies

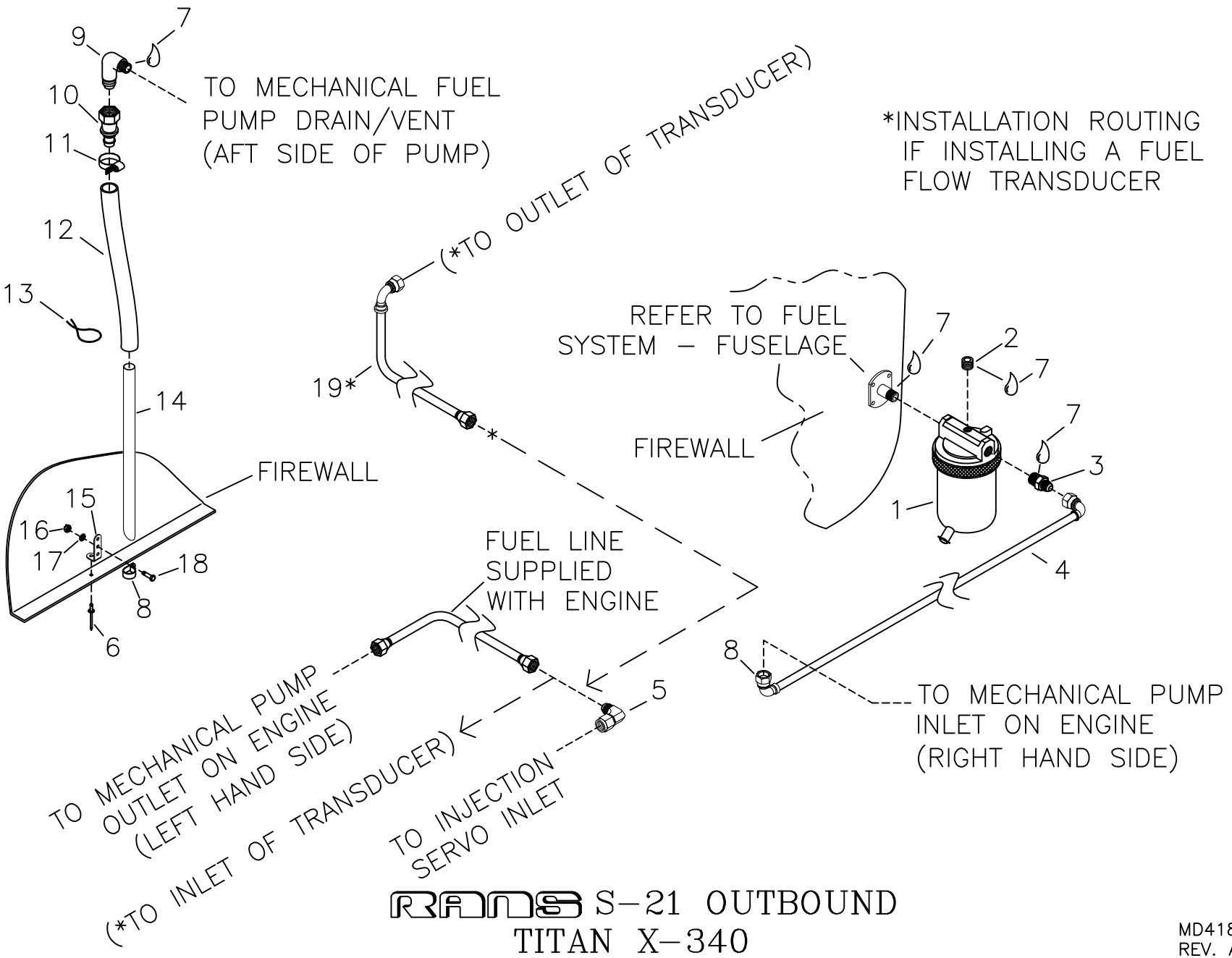

RANS S-21 OUTBOUND
TITAN X-340
FUEL SYSTEM INSTALLATION – FIREWALL FORWARD

MD4187
REV. A

RANS S-21 OUTBOUND

TITAN X-340 - FUEL SYSTEM - FIREWALL FORWARD

#	DESCRIPTION	PART NUMBER	QUANTITY
1.	Gascolator - High Pressure	KSPW0109	1
2.	1/8" Pipe Plug	PIPE-PLUG 1/8	1
3.	Straight Fitting	AN816-6D	1
4.	Fuel Line Assembly - Gascolator to Pump	KSPW0131	1
5.	90 Degree -6 AN Swivel Fitting	KSFS0041	1
6.	3/16" Stainless Steel Rivet - Cherry Q	CCPQ-62	1
7.	Thread Sealant *	-----	0
8.	1/4" Plain Clamp	AN742-D4	1
9.	90-degree Elbow - Flare 1/4" Tube to 1/8" NPT	AN822-4D	1
10.	1/4" Hose Fitting	30682-4-4	1
11.	Hose Clamp - 5/8"	5-6202	1
12.	Black Fuel Line - 1/4"	KSFS0002	1 ft
13.	Safety Wire *	-----	0
14.	Fuel Pump Drain Line, 1/4" x .028" x 5" Aluminum Tube **	KAAC0044-2	1
15.	Angle Bracket	KPAC0004	1
16.	3/16" Shear Nut	AN364-1032A	1
17.	3/16" Thin Washer	AN960-10L	1
18.	3/16" Bolt	AN3-3A	1
19.	Optional - Fuel Line Assembly - Transducer to Fuel Servo ***	KSPW0132	0

* Builder Supplied
** Builder Modifies
*** Optional for installing a Fuel Flow Transducer

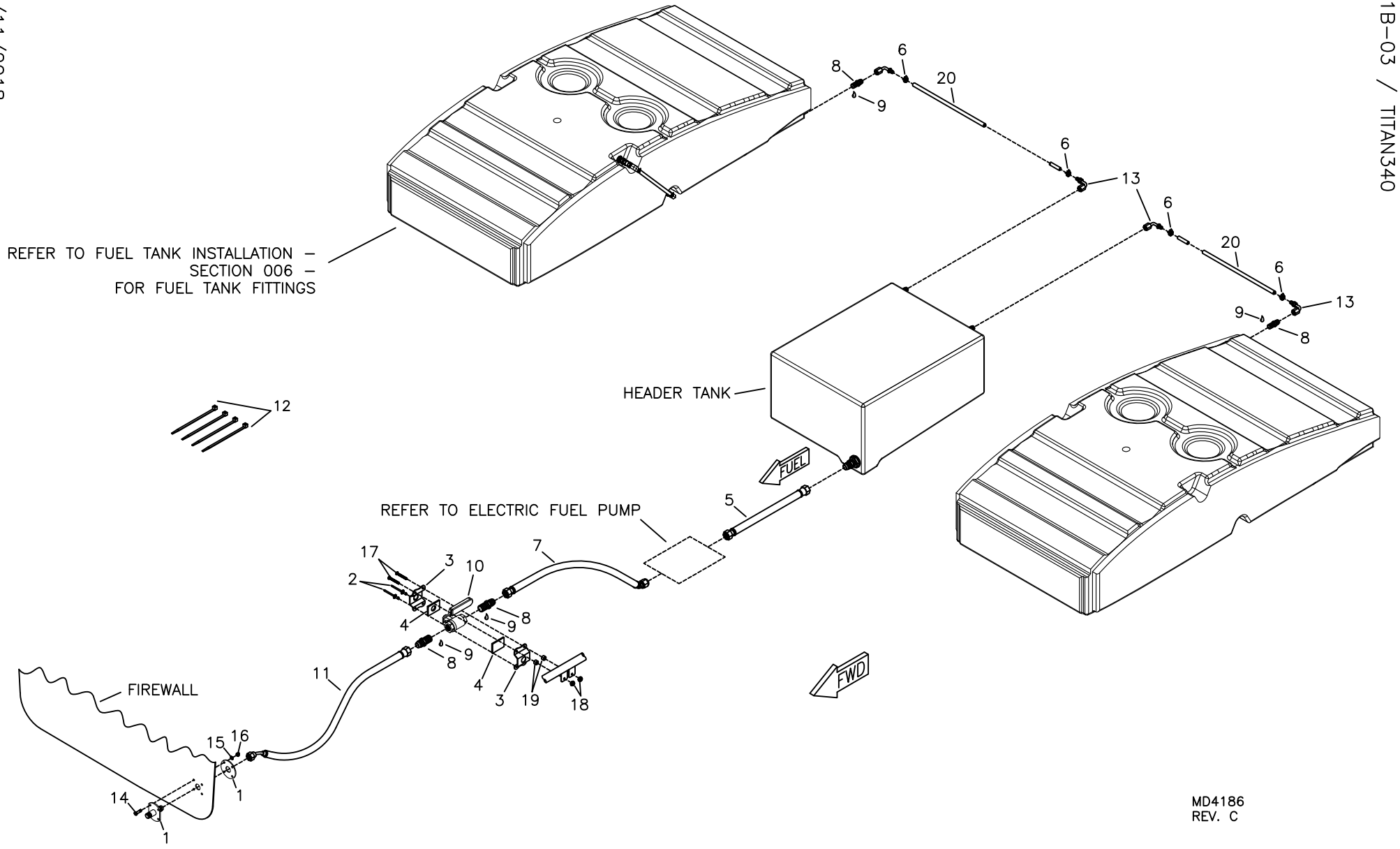

RANS S-21 OUTBOUND
TITAN X-340
FUEL SYSTEM – FUSELAGE

RANS S-21 OUTBOUND

TITAN X-340 - FUEL SYSTEM - FUSELAGE

#	DESCRIPTION	PART NUMBER	QUANTITY
1.	Gascolator Mount - High Pressure	KSPW0110	1
2.	1/8" Aluminum Rivet - Cherry Q	AAPQ-42	4
3.	Fuel Valve Mount Bracket	KPFS0037	2
4.	Fuel Valve Silicone Pad *	KPFS0106	1
5.	Fuel Line Assembly - Header Tank to Filter	KSPW0143	1
6.	Hose Clamp - 7/8"	5-6203	4
7.	Fuel Line Assembly - Fuel Pump to Fuel Valve	KSPW0144	1
8.	Nipple - Flared Tube & Pipe Thread	AN816-6D	4
9.	Thread Sealant **	-----	0
10.	Fuel Valve	KSFS0018	1
11.	Fuel Line Assembly - Fuel Valve to Gascolator	KSPW0145	1
12.	Plastic Tie - 7.5"	N-TIES	4
13.	90 Degree 3/8" Hose Fitting	33982-6-6	4
14.	3/16" Bolt	AN3-4A	4
15.	3/16" Thin Washer	AN960-10L	4
16.	3/16" Shear Nut	AN364-1032A	4
17.	Brass Bolt	MS35214-20	2
18.	#4-40 Nut	AN364-440A	2
19.	Aluminum Bushing, 1/4" x .028" x .160" *	KAAC0044-2	0
20.	Black Fuel Line - 3/8"	27004	13 ft

* Builder Modifies
** Builder Supplied

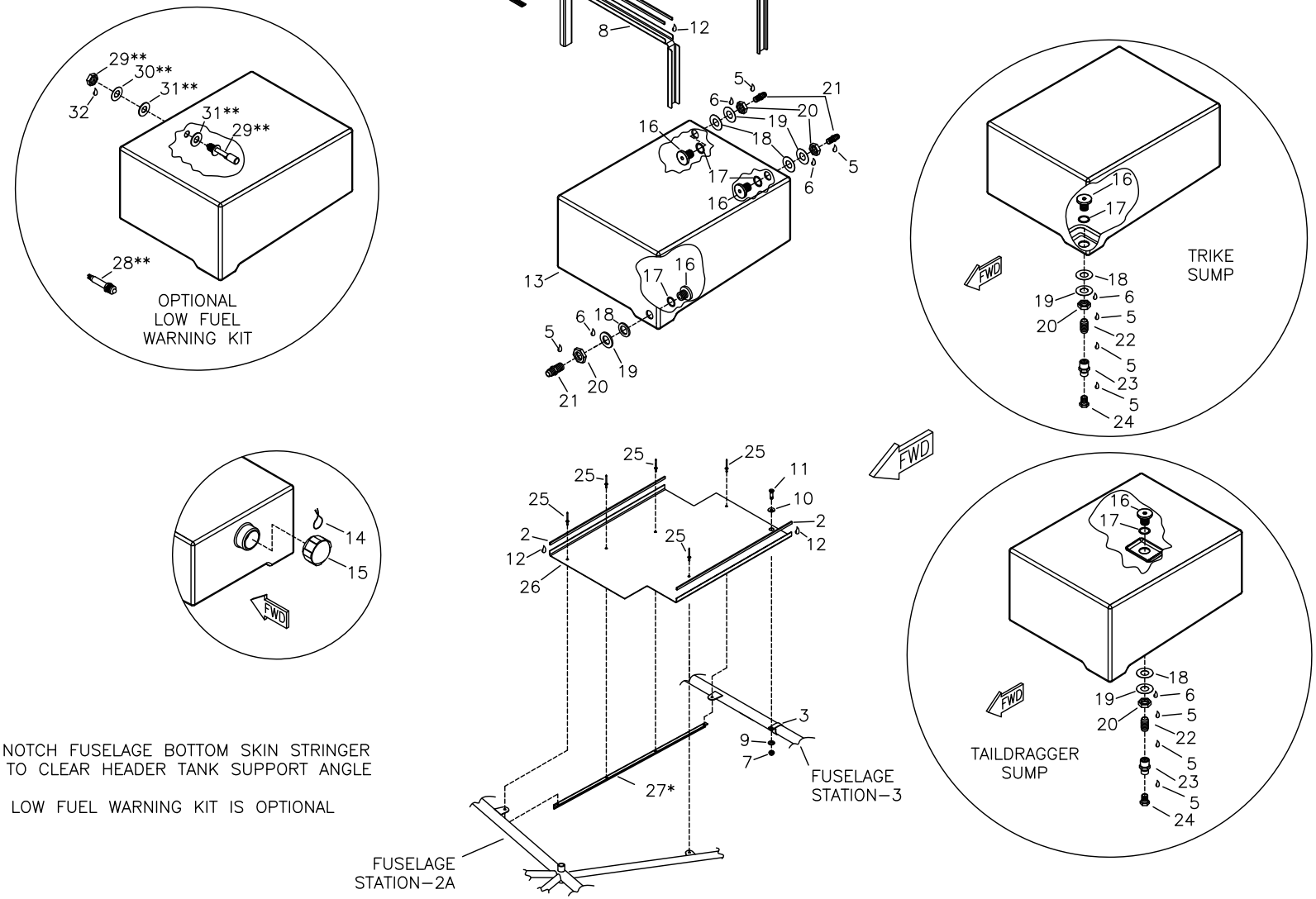

* NOTCH FUSELAGE BOTTOM SKIN STRINGER TO CLEAR HEADER TANK SUPPORT ANGLE

** LOW FUEL WARNING KIT IS OPTIONAL

RANS S-21 OUTBOUND
TITAN X-340
FUEL SYSTEM - HEADER TANK

MD4186
REV. - ORIG

RANS S-21 OUTBOUND

TITAN X-340 - FUEL SYSTEM - HEADER TANK

#	DESCRIPTION	PART NUMBER	QUANTITY
1.	15" Hose Clamp	KSHW0100	2
2.	Rubber Edging	8510K11	7 ft
3.	5/8" Plain Clamp	AN742-D10	1
4.	6.9 Gal. Header Tank Mount Channel - AFT	KPFS0110	1
5.	Thread Sealant *	-----	0
6.	Loctite Blue *	-----	0
7.	3/16" Shear Nut	AN364-1032A	1
8.	6.9 Gal. Header Tank Mount Channel - FWD	KPFS0111	1
9.	3/16" Thick Washer	AN960-10	1
10.	3/16" Countersunk Washer (100 degree)	NAS1169-10L	1
11.	3/16" Countersunk Machine Screw (100 degree)	MS24694-S50	1
12.	Adhesive - Superglue *	-----	0
13.	Header Tank - 6.9 Gal.	KPFS0103	1
14.	Safety Wire *	-----	0
15.	Fuel Cap	KSFS0007	1
16.	3/4" Bulkhead Fitting	KSFS0037	4
17.	O-Ring - 3/4" Bulkhead	KSFS0039	4
18.	Rubber Washer	KSFS0016	4
19.	3/4" Thick Washer	AN960-1216	4
20.	Nut - 3/4" Bulkhead - Reverse Thread	KSFS0038	4
21.	Nipple - Flared Tube & Pipe Thread	AN816-6D	3
22.	Close Nipple	KSFS0021	1
23.	Reducer	KSFS0022	1
24.	Flush Valve	KSFS0011	1
25.	1/8" Stainless Steel Rivet - Cherry Q	CCPQ-42	5
26.	6.9 Gal. Header Tank Mount	KPFS0109	1
27.	Header Tank Mount Angle	KPFU0758	1
28.	Red LED Indicator Light, 12V **	KSES0071	1
29.	Low Fuel Warning Switch **	KSES0072	1
30.	5/8" Thick Washer (AN960-1016) **	TW-5/8-W	1
31.	5/8" Rubber Washer **	KSFS0040	2
32.	DOW 730 Sealant *	-----	0

* Builder Supplied
** KAFS0003 - Low Fuel Warning Kit is Optional

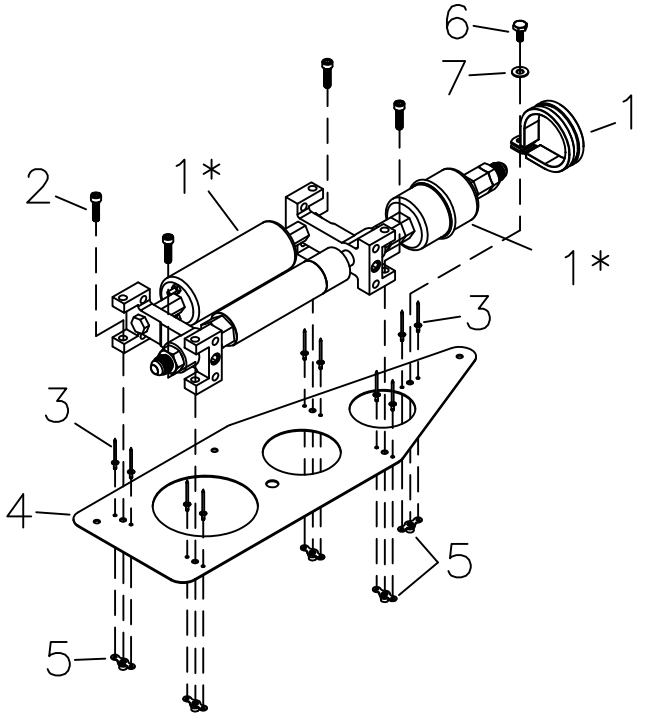

PUMP TO MOUNT PLATE INSTALL

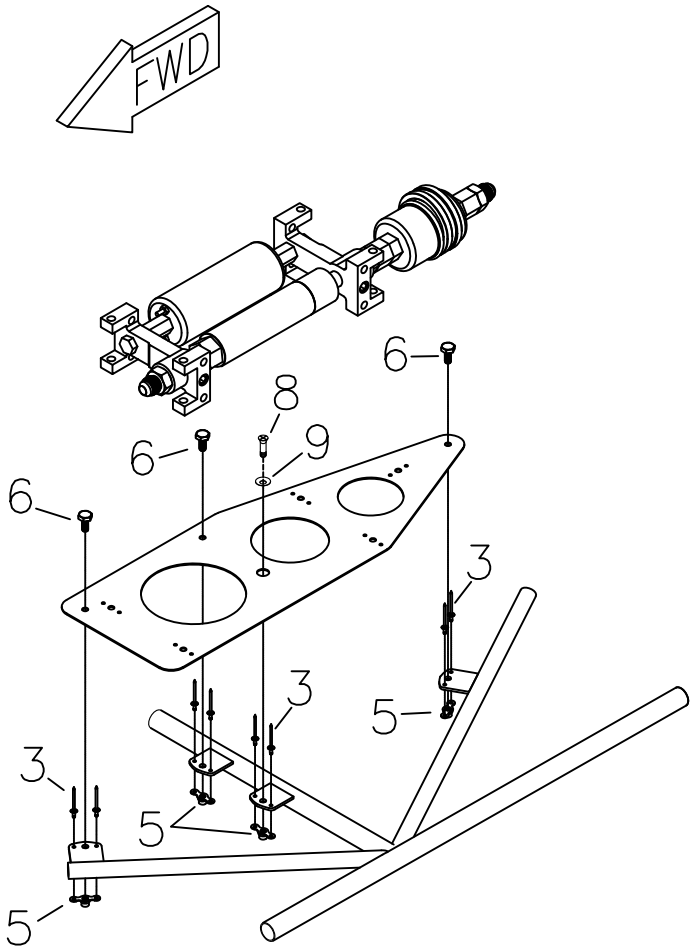

MOUNT PLATE TO FUSELAGE INSTALL
UNDER LEFT PILOT SEAT

* PUMP ASSEMBLED IN SHORT CONFIGURATION
PER DOCUMENTATION AT LINK BELOW.
https://www.flyefii.com/products/boost-pump/installation-tips/

SOME DUPLICATED ITEMS
NOT NUMBERED FOR SIMPLICITY

RANS S-21 OUTBOUND
TITAN X-340
FUEL SYSTEM - ELECTRIC FUEL PUMP

MD4186
REV. A

RANS S-21 OUTBOUND

TITAN X-340 - FUEL SYSTEM - ELECTRIC FUEL PUMP

#	DESCRIPTION	PART NUMBER	QUANTITY
1.	Electric Fuel Pump - High Pressure	KSPW0104	1
2.	3/16" Socket Head Cap Screw	KSHW0111	4
3.	3/32" Aluminum Rivet	40APR1/8	18
4.	Fuel Pump Mounting Plate	KPFS0116	1
5.	3/16" Nut Plate	K-1000-3	9
6.	3/16" Bolt	AN3-3A	4
7.	3/16" Thin Washer	AN960-10L	1
8.	3/16" Countersunk Machine Screw (100 degree)	MS24694-S50	1
9.	3/16" Countersunk Washer (100 degree)	NAS1169-10L	1

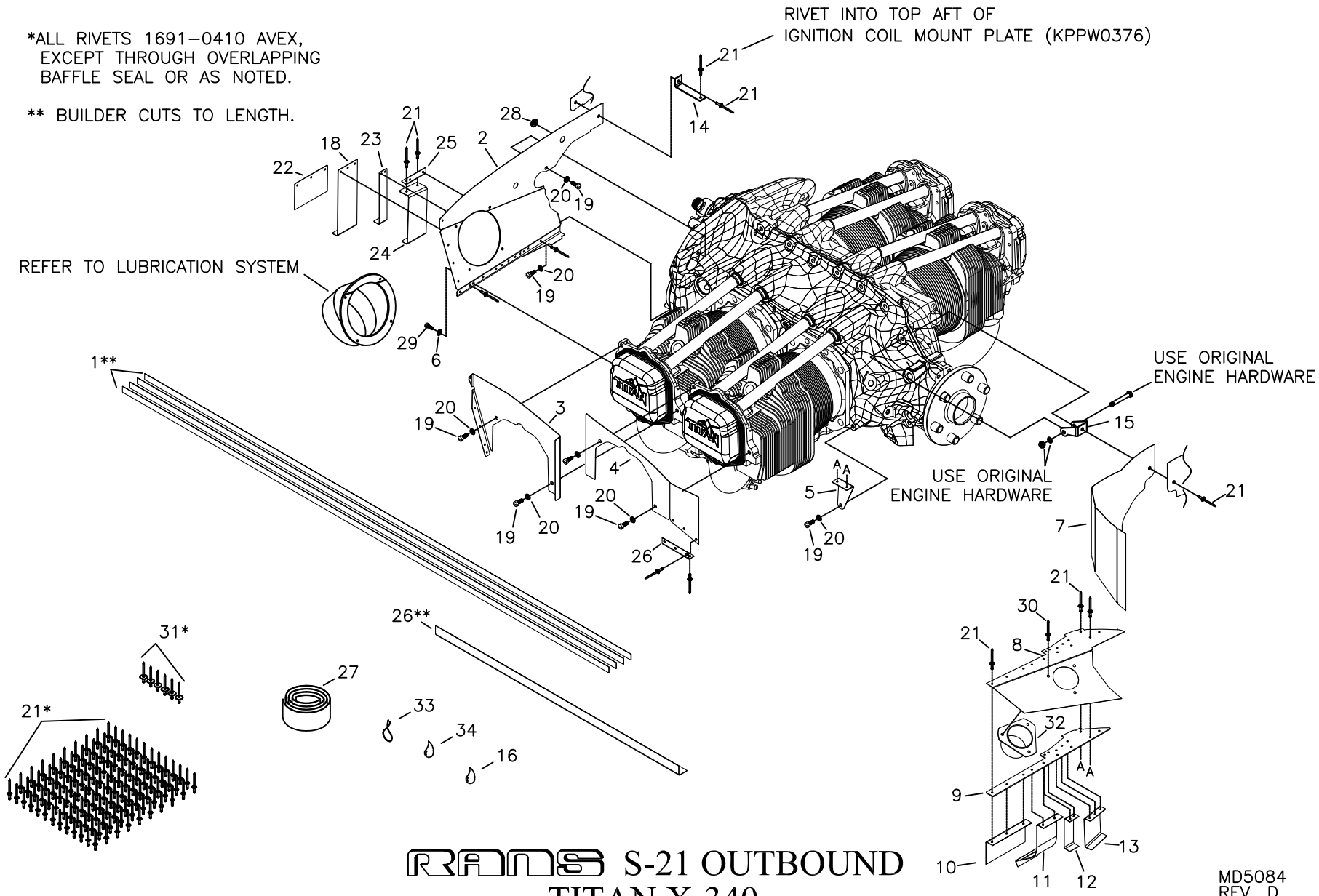

RANS S-21 OUTBOUND
TITAN X-340
BAFFLE - RIGHT INSTALLATION

MD5084
REV. D

RANS S-21 OUTBOUND

TITAN X-340 - BAFFLE - RIGHT INSTALLATION

#	DESCRIPTION	PART NUMBER	QUANTITY
1.	Baffle Seal Capture Strip	KPPW0343	4
2.	Cooling Baffle - AFT - Right	KPPW0380	1
3.	Cooling Baffle - Side - Right - AFT	KPPW0326-3	1
4.	Cooling Baffle - Side - Right - FWD	KPPW0326-4	1
5.	Cooling Baffle - Support Angle - Right - FWD	KPPW0326-18	1
6.	#8 Loc Washer	KSHW0120	1
7.	Cooling Baffle - FWD - Right	KPPW0326-12	1
8.	Cooling Baffle - Inlet Floor - Right	KPPW0326-10	1
9.	Cooling Baffle - Inlet Floor - Reinforcement	KPPW0326-9	1
10.	Cooling Baffle - Outer Cylinder Plate - FWD	KPPW0326-19	1
11.	Cooling Baffle - Inner Cylinder Plate - FWD	KPPW0326-20	1
12.	Cooling Baffle - Outer Barrel Plate - FWD	KPPW0326-22	1
13.	Cooling Baffle - Inner Barrel Plate - RH	KPPW0326-21R	1
14.	Aft Ignition Brace *	KPES0036	1
15.	Cooling Baffle - FWD Support Bracket	KPPW0377	1
16.	Silicone Seal - High Temp - Red **	-----	0
17.	Cooling Baffle - Outer Barrel Plate - AFT	KPPW0326-24	1
18.	Cooling Baffle - Inner Cylinder Plate - AFT	KPPW0326-25	1
19.	1/4" Course Thread Screw	KSHW0103	7
20.	1/4" Thin Washer	AN960-416L	7
21.	1/8" Aluminum Rivet - Avex	1691-0410	127
22.	Cooling Baffle - Outer Cylinder Plate - AFT	KPPW0326-31	1
23.	Cooling Baffle - Outer Barrel Plate - AFT	KPPW0326-26	1
24.	Cooling Baffle - Inner Barrel Plate - LH	KPPW0326-21L	1
25.	Cooling Baffle - Inner Barrel Plate - Mount	KPPW0326-28	1
26.	Inlet Support Angle *	KPPW0326-30	1
27.	Baffle Seal Material *	KPPW0328	14 ft
28.	Rubber Grommet	MS35489-6	1
29.	8-32 Bolt	KSHW0102	1
30.	3/16" Aluminum Rivet - Cherry Q	AAPQ-62	3
31.	Aluminum Fabric Rivet	ABL4-2AV	6
32.	Cabin Heat Inlet	KPPW0324	1
33.	Safety Wire **	-----	0
34.	Loctite Blue **	-----	0

* Builder Modifies
** Builder Supplied

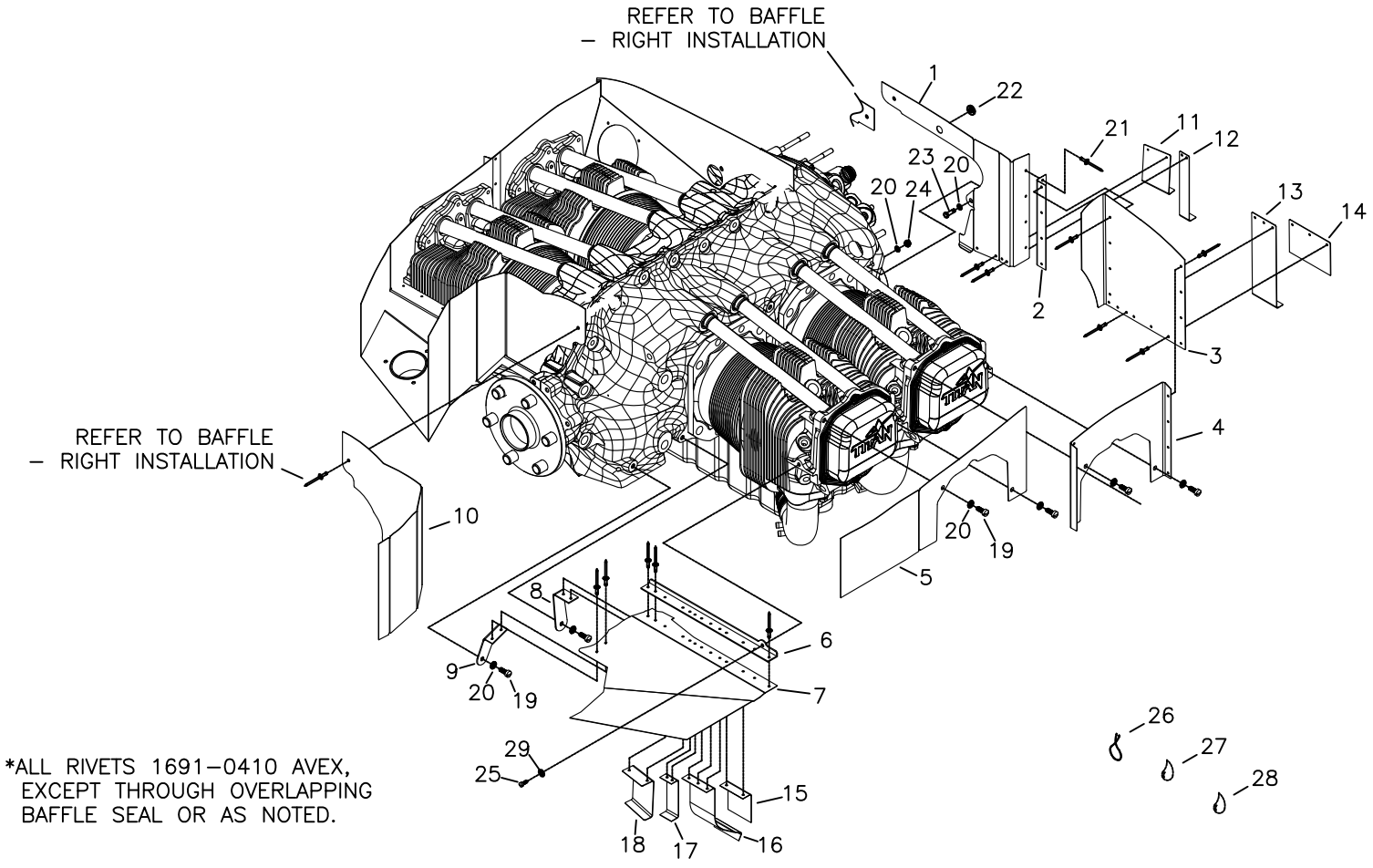

RAVE S-21 OUTBOUND
TITAN X-340
BAFFLE - LEFT INSTALLATION

MD5084
REV. B

RANS S-21 OUTBOUND

TITAN X-340 - BAFFLE - LEFT INSTALLATION

#	DESCRIPTION	PART NUMBER	QUANTITY
1.	Cooling Baffle - AFT- Inner Left	KPPW0326-7	1
2.	Cooling Baffle - AFT Support Angle	KPPW0326-29	1
3.	Cooling Baffle - AFT - Outer Left	KPPW0326-6	1
4.	Cooling Baffle - Side - Left - AFT	KPPW0326-1	1
5.	Cooling Baffle - Side - Left - FWD	KPPW0326-2	1
6.	Cooling Baffle - Support Angle - Left - FWD	KPPW0326-14	1
7.	Cooling Baffle - Inlet Floor - Left	KPPW0326-13	1
8.	Cooling Baffle - Support Angle - Left - AFT	KPPW0326-15	1
9.	Cooling Baffle - Support Angle - Left - FWD	KPPW0326-17	1
10.	Cooling Baffle - FWD - Left	KPPW0326-16	1
11.	Cooling Baffle - Inner Barrel Plate - AFT	KPPW0326-27	1
12.	Cooling Baffle - Outer Barrel Plate - AFT	KPPW0326-26	1
13.	Cooling Baffle - Inner Cylinder Plate - AFT	KPPW0326-25	1
14.	Cooling Baffle - Outer Barrel Plate - AFT	KPPW0326-24	1
15.	Cooling Baffle - Outer Cylinder Plate - AFT	KPPW0326-23	1
16.	Cooling Baffle - Inner Cylinder Plate - FWD	KPPW0326-20	1
17.	Cooling Baffle - Outer Barrel Plate - FWD	KPPW0326-22	1
18.	Cooling Baffle - Inner Barrel Plate - LH	KPPW0326-21L	1
19.	1/4" Course Thread Screw	KSHW0103	6
20.	1/4" Thin Washer	AN960-416L	8
21.	1/8" Aluminum Rivet - Avex	1691-0410	52
22.	Rubber Grommet	MS35489-6	1
23.	1/4" Bolt	AN4-6A	1
24.	1/4" Shear Nut	AN364-428A	1
25.	8-32 Bolt	KSHW0102	1
26.	Safety Wire *	-----	0
27.	Loctite Blue *	-----	0
28.	Silicone Seal - High Temp - Red *	-----	0
29.	#8 Loc Washer	KSHW0120	1

* Builder Supplied

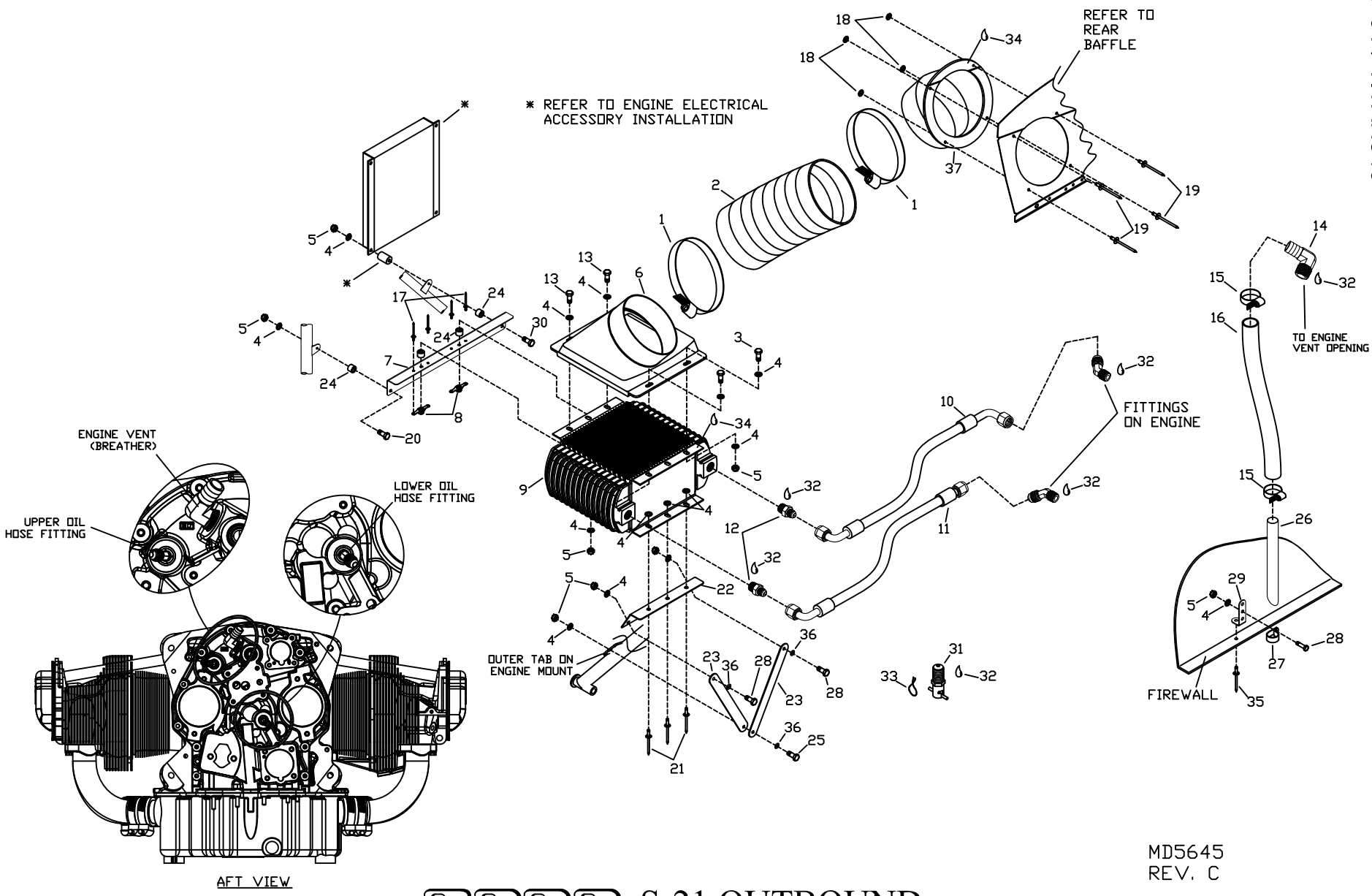

MD5645
REV. C

RAMS S-21 OUTBOUND
TITAN X-340
LUBRICATION SYSTEM INSTALLATION

RANS S-21 OUTBOUND

TITAN X-340 - LUBRICATION SYSTEM ASSEMBLY & INSTALLATION

#	DESCRIPTION	PART NUMBER	QUANTITY
1.	Hose Clamp - 4 1/2"	5-5264	2
2.	Hose - 4"	KPPW0378	1 ft
3.	3/16" Bolt	AN3-4A	2
4.	3/16" Thin Washer	AN960-10L	15
5.	3/16" Shear Nut	AN364-1032A	8
6.	Oil Cooler - Lower Shroud - 4"	KPPW0375	1
7.	Oil Cooler Mount Angle	KPPW0325	1
8.	3/16" Nut Plate	K-1000-3	2
9.	Oil Cooler - 13 Row	KSPW0141	1
10.	Oil Hose Assembly - Upper	KSPW0122	1
11.	Oil Hose Assembly - Lower	KSPW0123	1
12.	Straight Adapter - AN-8 Male to 3/8" NPT Male - SS	KSPW0146	2
13.	3/16" Bolt	AN3-7A	2
14.	5/8" Hose x 1/2" Male NPT 90° Elbow Barb	KSPW0098	1
15.	Hose Clamp - 1"	5-5210	2
16.	Oil Line - 5/8"	KSPW0117	2 ft
17.	3/32" Aluminum Rivet	40APR1/8	4
18.	1/8" Small Brass Washer	AN960-B4	4
19.	1/8" Aluminum Rivet - Avex	1691-0410	4
20.	3/16" Bolt	AN3-6A	1
21.	3/16" Stainless Steel Rivet - Cherry Q	CCPQ-64	3
22.	FWD Oil Cooler Support	KPPW0379	1
23.	Mount Bracket - Radiator *	KPAC0174	2
24.	Spacer Bushing, 3/8" x .095" x .30" *	KPAC0060	1
25.	3/16" Bolt	AN3-5A	1
26.	Engine Breather Vent Tube	KPPW0332	1
27.	5/8" Plain Clamp	AN742-D10	1
28.	3/16" Bolt	AN3-3A	3
29.	Angle Bracket	KPAC0004	1
30.	3/16" Bolt	AN3-13A	1
31.	Oil Drain Valve	KSPW0114	1
32.	Thread Sealant **	-----	0
33.	Safety Wire **	-----	0
34.	Silicone Seal - High Temp - Red **	-----	0
35.	3/16" Stainless Steel Rivet - Cherry Q	CCPQ-62	1
36.	Spacer Bushing, 1/4" x .028" x .125" *	KAAC0044-2	0
37.	Oil Cooler - Upper Duct - 4"	KPPW0373	1

* Builder Modifies
** Builder Supplied

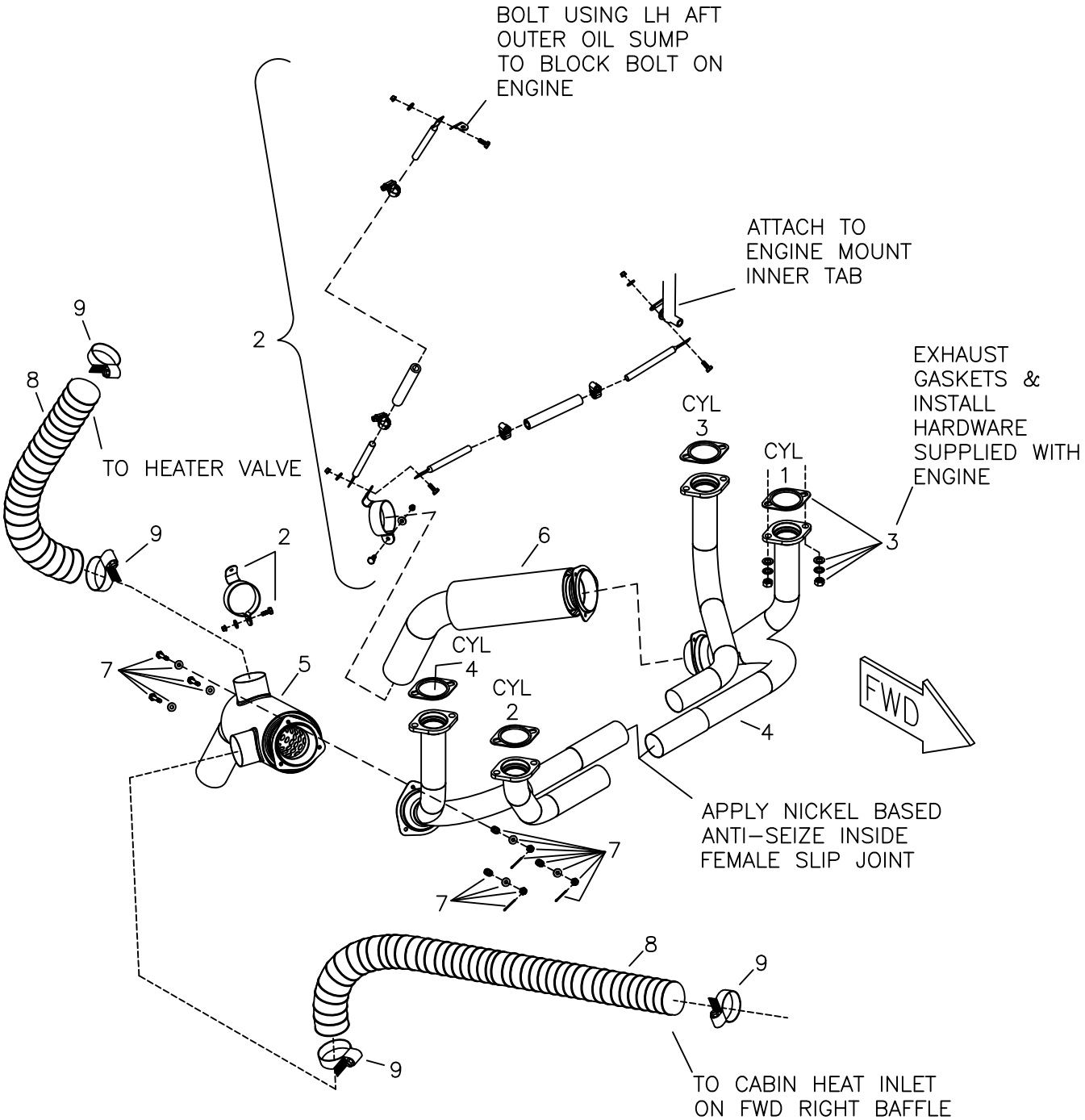

DUPLICATED PARTS FOR LEFT AND RIGHT ASSEMBLIES NOT CALLED OUT INDIVIDUALLY.

MD5644
REV. B

RAMS S-21 OUTBOUND
TITAN X-340
CROSS-OVER EXHAUST ASSEMBLY

09/11/2018

RANS S-21 OUTBOUND

TITAN X-340 - CROSS-OVER EXHAUST ASSEMBLY

KSEX0017

#	DESCRIPTION	PART NUMBER	QUANTITY
1.	Titan X-340 Cross-over Exhaust Assembly (Complete)	KSEX0017	1
2.	Tailpipe Support System Kit *	KSEX0017-1	0
3.	Gaskets & Install Hardware **	-----	0
4.	Crossover Exhaust System , Cylinders 1,2,3,4 *	KSEX0017-3	0
5.	Right Muffler with Cabin Heat Shroud and Tailpipe *	KSEX0017-4	0
6.	Left Muffler and Tailpipe *	KSEX0017-5	0
7.	Ball Joint Hardware Kit *	KSEX0017-6	0
8.	2" Duct Hose	KPSY0046	6 ft
9.	Hose Clamp - 2 1/4"	5-5228	4

* Supplied with KSEX017, may be purchased seperately from RANS Parts Dept
** Supplied with Engine

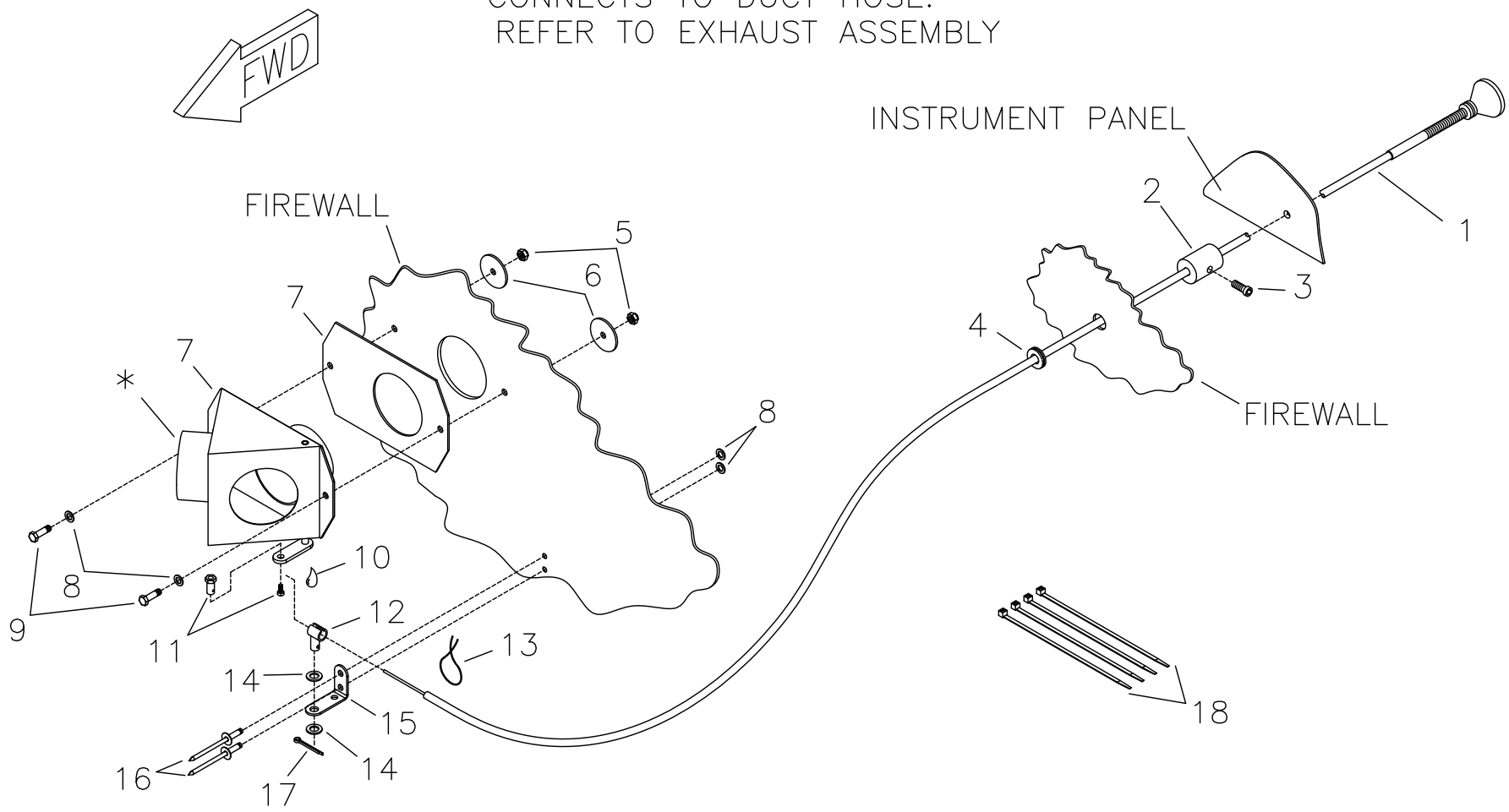

RANS S-21 OUTBOUND
TITAN X-340
CABIN HEATER INSTALLATION

RANS S-21 OUTBOUND

TITAN X-340 - CABIN HEATER INSTALLATION

#	DESCRIPTION	PART NUMBER	QUANTITY
1 .	Control Cable	4-336	1
2 .	Cable Friction Block	T-STOP	1
3 .	Socket Head Cap Screw	T-SC	1
4 .	3/16" Rubber Grommet	KSAC0002	1
5 .	3/16" Shear Nut	AN364-1032A	2
6 .	3/16" Large Washer	AN970-3	2
7 .	Heater Tri-Box	KSSY0005	1
8 .	3/16" Thin Washer	AN960-10L	4
9 .	3/16" Bolt	AN3-3A	2
10 .	Loctite Blue *	-----	0
11 .	Cable Swivel Stop & Screw	2361	1
12 .	Cable Housing Swivel Stop	KPBS0009	1
13 .	Safety Wire *	-----	0
14 .	1/4" Thick Washer	AN960-416	2
15 .	Cable Housing Swivel Stop Bracket	KPBS0010	1
16 .	3/16" Stainless Steel Rivet - Cherry Q	CCPQ-62	2
17 .	Small Cotter Pin	MS24665-134	1
18 .	Plastic Tie - 7.5"	N-TIES	4

* Builder Supplied

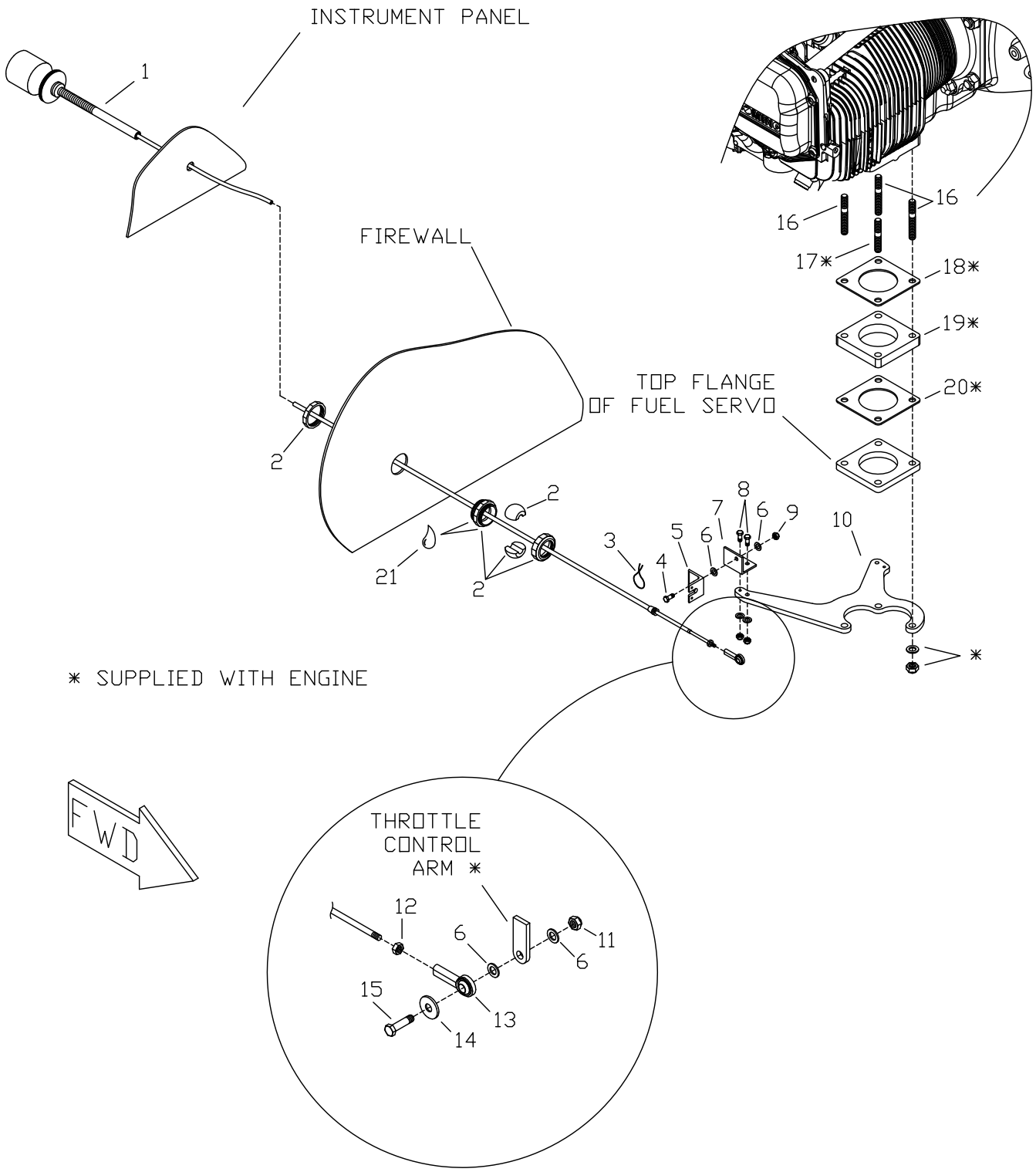

MD5645
REV. A

RANS S-21 OUTBOUND
TITAN X-340
THROTTLE ASSEMBLY

RANS S-21 OUTBOUND

TITAN X-340 - THROTTLE ASSEMBLY

#	DESCRIPTION	PART NUMBER	QUANTITY
1 .	Throttle Control Cable	KSCS0028	1
2 .	Eyeball Firewall Fitting	KSHW0118	1
3 .	Safety Wire *	-----	0
4 .	3/16" Bolt	AN3-4A	1
5 .	Teleflex Retainer	W-TEL-R	1
6 .	3/16" Thin Washer	AN960-10L	6
7 .	Retainer Angle - 1" x 1" x 1.25" **	KPPW0341	1
8 .	3/16" Bolt	AN3-5A	2
9 .	3/16" Shear Nut	AN364-1032A	3
10 .	Throttle / Mixture Control Mount	KPPW0340	1
11 .	3/16" Shear Nut - Steel	AN364-1032C	1
12 .	3/16" Plain Nut	AN345-10	1
13 .	Female Rod End	NF-3	1
14 .	#10 Washer - Stainless Steel	BSHW0022	1
15 .	3/16" Bolt	AN3-7A	1
16 .	Fuel Servo Mount Stud - Longer	KSHW0114	3
17 .	Fuel Servo Mount Stud - Long ***	-----	0
18 .	Gasket ***	-----	0
19 .	Fuel Servo Spacer ***	-----	0
20 .	Gasket ***	-----	0
21 .	Loctite Blue *	-----	0

* Builder Supplied
** Builder Modifies
*** Supplied with Engine

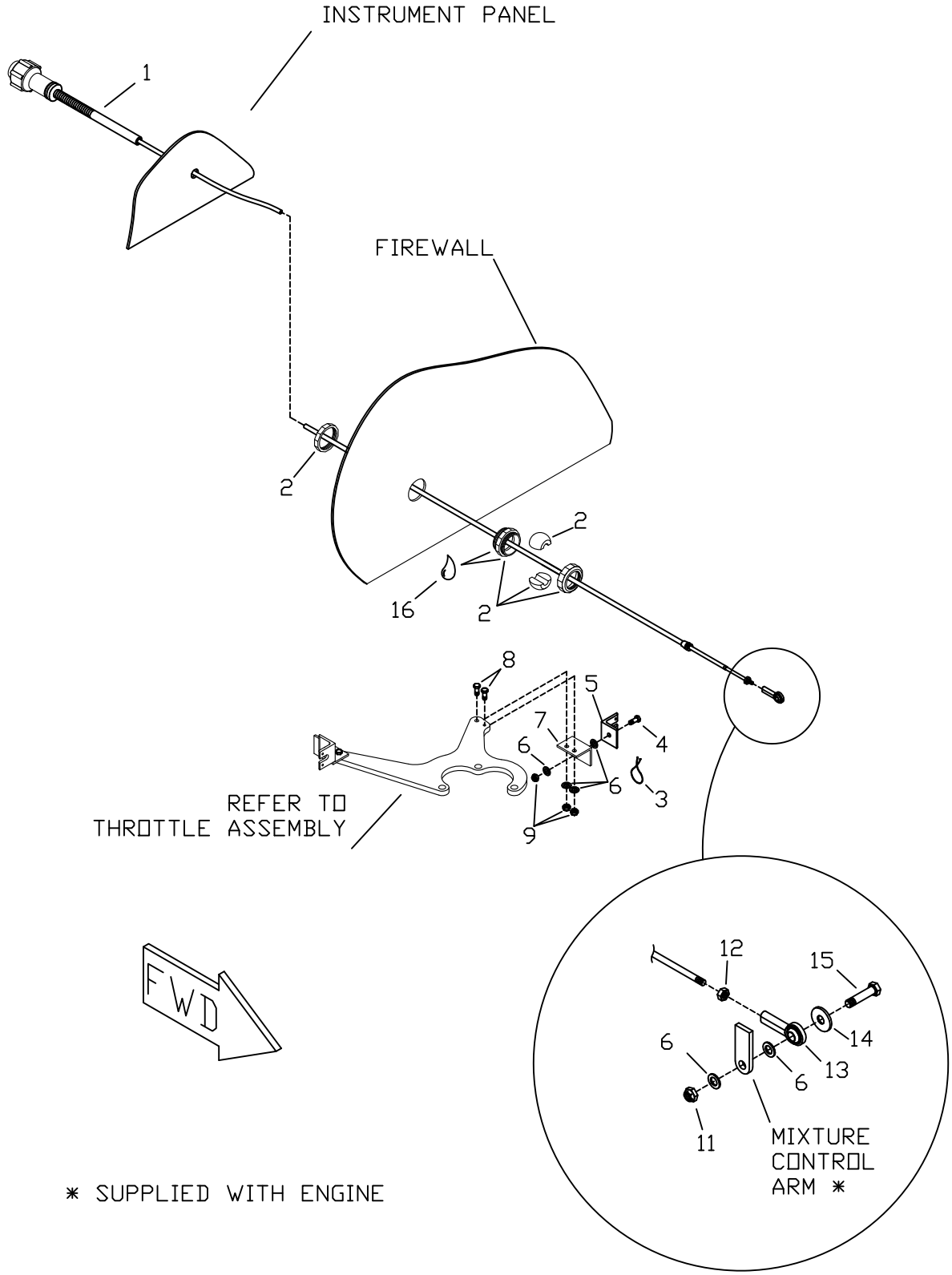

* SUPPLIED WITH ENGINE

MD5645
REV. B

RANS S-21 OUTBOUND
TITAN X-340
MIXTURE CONTROL ASSEMBLY

09/11/2018

RANS S-21 OUTBOUND

TITAN X-340 - MIXTURE CONTROL ASSEMBLY

#	DESCRIPTION	PART NUMBER	QUANTITY
1.	Mixture Control Cable	KSCS0029	1
2.	Eyeball Firewall Fitting	KSHW0118	1
3.	Safety Wire *	-----	0
4.	3/16" Bolt	AN3-4A	1
5.	Teleflex Retainer	W-TEL-R	1
6.	3/16" Thin Washer	AN960-10L	6
7.	Retainer Angle - 1" x 1" x 1.25" **	KPPW0341	0
8.	3/16" Bolt	AN3-5A	2
9.	3/16" Shear Nut	AN364-1032A	3
10.	3/16" Thick Washer	AN960-10	2
11.	3/16" Shear Nut - Steel	AN364-1032C	1
12.	3/16" Plain Nut	AN345-10	1
13.	Female Rod End	NF-3	1
14.	#10 Washer - Stainless Steel	BSHW0022	1
15.	3/16" Bolt	AN3-7A	1
16.	Loctite Blue *	-----	0

* Builder Supplied
** Builder Modifies

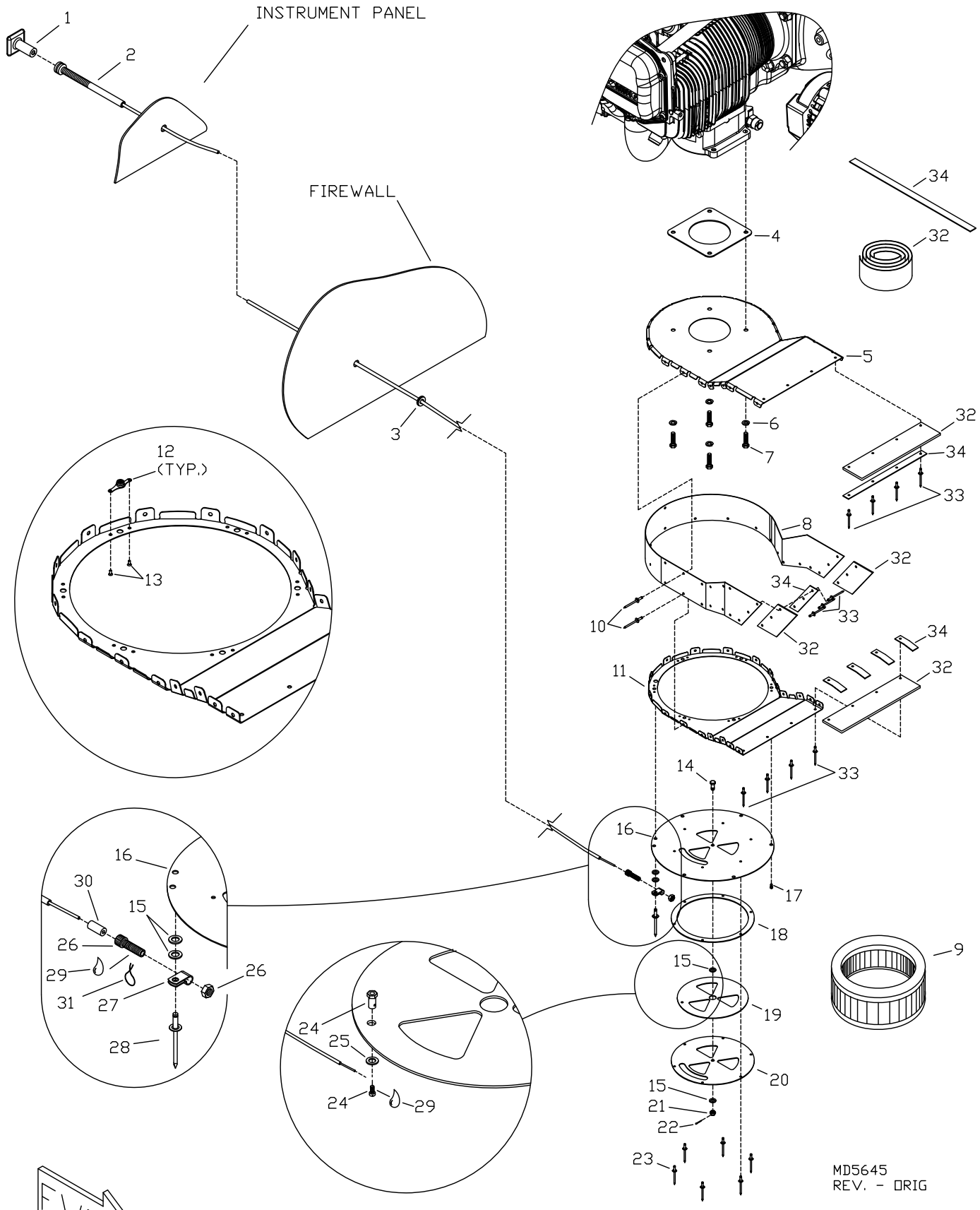

RANS S-21 OUTBOUND
TITAN X-340
AIRBOX ASSEMBLY

RANS S-21 OUTBOUND

TITAN X-340 - AIRBOX ASSEMBLY

#	DESCRIPTION	PART NUMBER	QUANTITY
1.	Alternate Air Knob	KSCS0032	1
2.	Alternate Air Control Cable Assembly	KSCS0030	1
3.	3/16" Rubber Grommet	KSAC0002	1
4.	Gasket *	-----	0
5.	Airbox Top	KPPW0333	1
6.	1/4" Loc Washer	AN935-416L	4
7.	1/4" Hex Head Cap Screw - course x .75"	KSHW0069	4
8.	Airbox Side	KPPW0337	1
9.	Air Filter	KSPW0113	1
10.	1/8" Aluminum Rivet - Cherry Q	AAPQ-41	38
11.	Airbox Bottom	KPPW0334	1
12.	8-32 Nut Plate	MS21047-08	6
13.	3/32" Solid Rivet - Flush (100 degree)	AN426-AD-3-5	12
14.	3/16" Bolt - Drilled Shank	AN3-4	1
15.	3/16" Thick Washer	AN960-10	4
16.	Airbox Filter Cover	KPPW0335	1
17.	8-32 Machine Screw	AN526-832R6	6
18.	Alternate Air Spacer Ring	KPPW0336	1
19.	Alternate Air Valve	KPPW0339	1
20.	Alternate Air Valve Retainer	KPPW0338	1
21.	3/16" Castle Nut	AN310-3	1
22.	Small Cotter Pin	MS24665-134	1
23.	1/8" Aluminum Rivet - Cherry Q	AAPQ-42	6
24.	Cable Swivel Stop & Screw	2361	1
25.	1/4" Thin Washer	AN960-416L	1
26.	Adjustable Cable Ferrule	12553	1
27.	1/4" Plain Clamp	AN742-D4	1
28.	3/16" Aluminum Rivet - Cherry Q	AAPQ-64	1
29.	Loctite Blue **	-----	0
30.	Cable Housing Endcap	ENDCAP-12000	1
31.	Safety Wire **	-----	0
32.	Baffle Seal Material ***	KPPW0328	0
33.	1/8" Aluminum Rivet - Avex	1691-0410	14
34.	Baffle Seal Capture Strip ***	KPPW0343	0

*Supplied with Injector Fuel Servo
** Builder Supplied
*** Builder Modifies

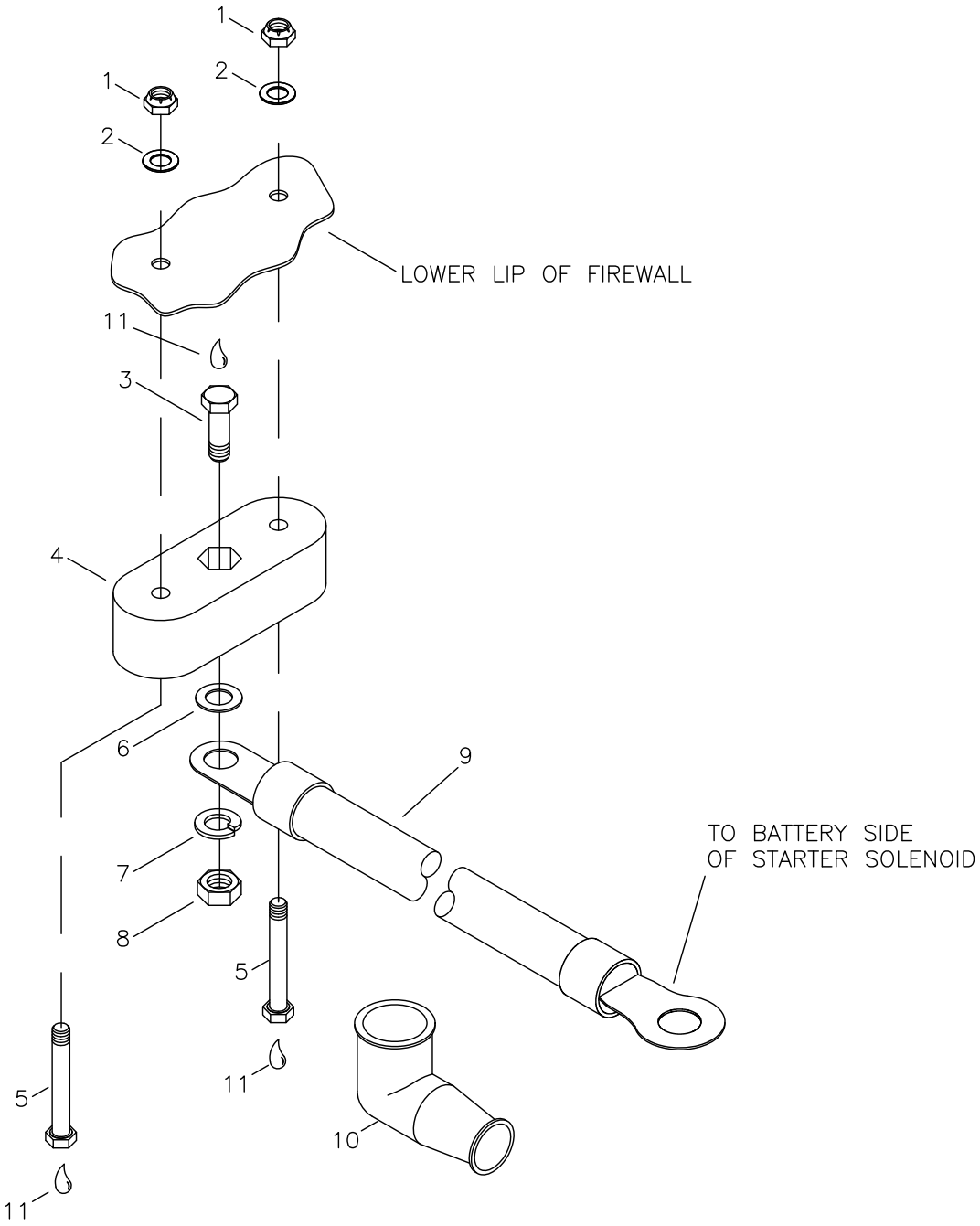

MD5501
REV. – ORIG

RAMS S-21 OUTBOUND
TITAN X-340
OPTIONS - REMOTE CHARGING POST INSTALLATION

RANS S-21 OUTBOUND

TITAN X-340 - OPTIONS - REMOTE CHARGING POST

KPES0043

#	DESCRIPTION	PART NUMBER	QUANTITY
1.	3/16" Shear Nut -Steel	AN364-1032C	2
2.	3/16" Thin Washer	AN960-10L	2
3.	1/4" Plain Bolt	1/4 X 1 BOLT	1
4.	Isolator Block	KPES0026	1
5.	3/16" Bolt	AN3-7A	2
6.	1/4" Thick Washer	AN960-416	1
7.	1/4" Loc Washer	AN935-416L	1
8.	1/4" Plain Nut	AN345-416	1
9.	Remote Battery Charger Cable	KAES0023	1
10.	Terminal Boot	MS25171-3S	1
11.	Silicone Seal *	-----	0

* Builder Supplied

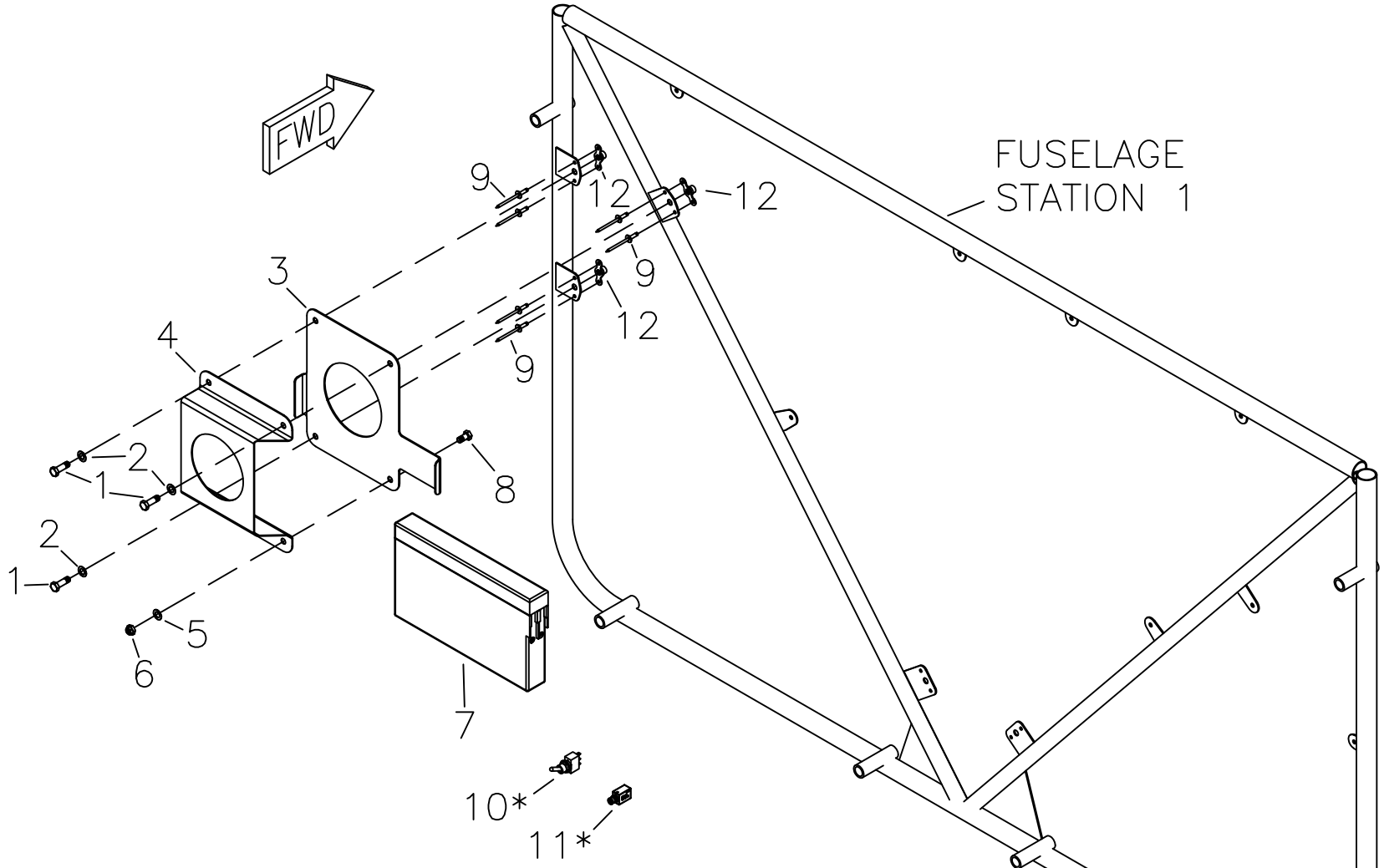

* DUE TO THE WIDE SELECTION OF SWITCHES, CIRCUIT BREAKERS AND CONNECTORS WHICH MAY BE USED TO CUSTOMIZE YOUR AIRCRAFT. THESE ITEMS ARE "BUILDER SUPPLIED".

RANS S-21 OUTBOUND
TITAN X-340
OPTIONS - IGNITION BACKUP BATTERY INSTALLATION

MD5501
REV. A

RANS S-21 OUTBOUND

TITAN X-340 - OPTIONS - IGNITION BACKUP BATTERY INSTALLATION

KPES0044

#	DESCRIPTION	PART NUMBER	QUANTITY
1.	3/16" Bolt	AN3-4A	3
2.	3/16" Thin Washer	AN960-10L	3
3.	Backup Battery Mount Plate	KPES0041	1
4.	Backup Battery Cover	KPES0042	1
5.	3/16" Thick Washer	AN960-10	1
6.	3/16" Shear Nut	AN364-1032A	1
7.	Backup Battery	KSES0078	1
8.	3/16" Bolt	AN3-3A	1
9.	3/32" Aluminum Rivet	40APR1/8	6
10.	SPDT Switch (ON-ON) *	-----	0
11.	10 Amp Breaker *	-----	0
12.	3/16" Nut Plate	K-1000-3	3

* Builder Supplied

NOTE: PROP EXTENSION REQUIRED.
REFER TO PROPELLER INSTALLATION

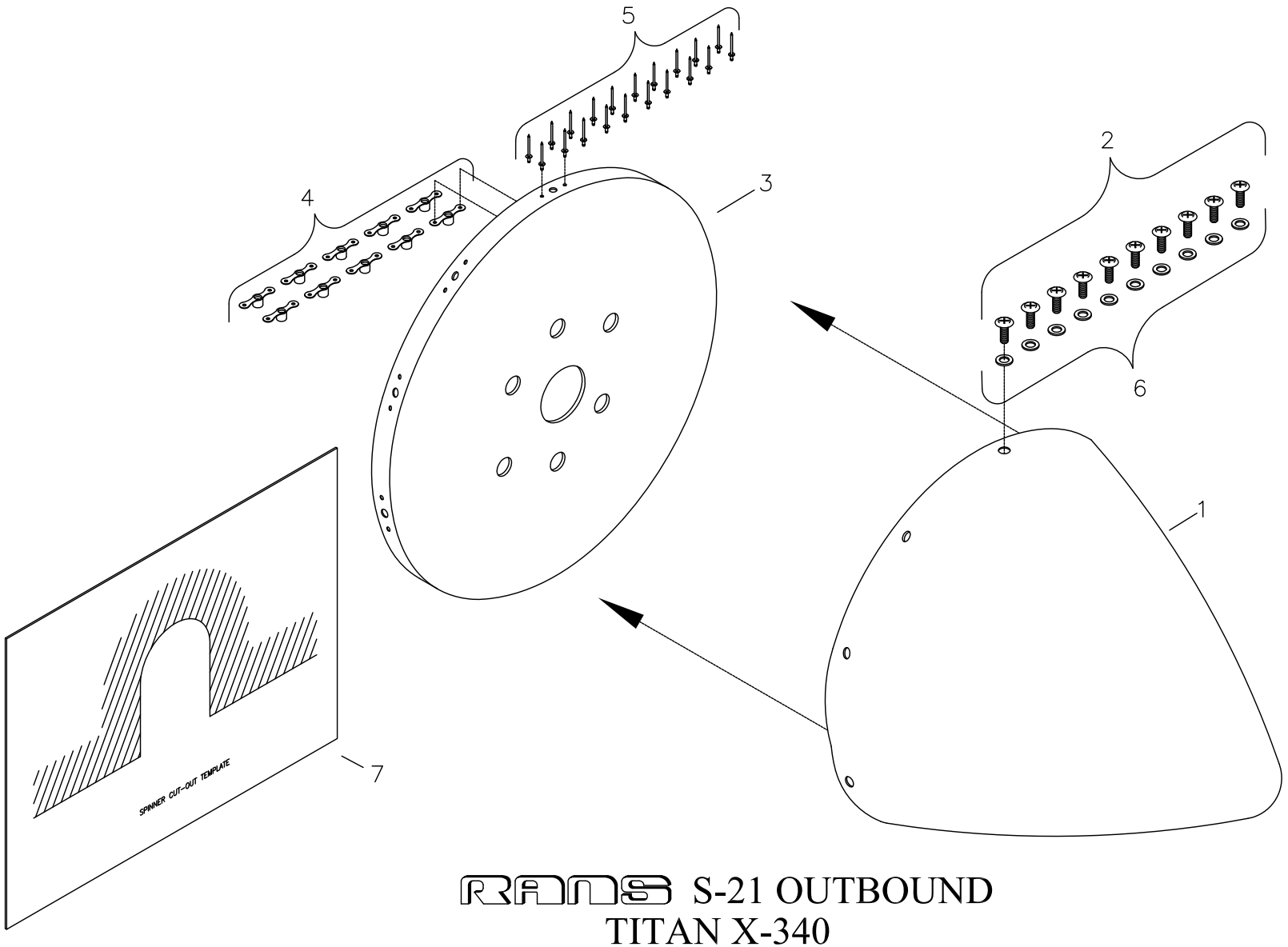

RANS S-21 OUTBOUND
TITAN X-340
13" SPINNER ASSEMBLY

MD5146
REV. – ORIG

RANS S-21 OUTBOUND

TITAN X-340 - 13" SPINNER ASSEMBLY

KAPR0001

#	DESCRIPTION	PART NUMBER	QUANTITY
1 .	Spinner Dome - 13"	KPPW0232	1
2 .	Pan Head Phillips Bolt (5/8" long)	KSHW0071	10
3 .	Spinner Backing Plate - 13" (SAE#2)	KPPW0305	1
4 .	3/16" Nut Plate	K-1000-3	10
5 .	3/32" Aluminum Rivet	40APR1/4	20
6 .	3/16" Thin Washer	AN960-10L	10
7 .	Spinner Cut-out Template *	-----	0

* Refer to Figures Manual for Spinner Cut-out Template

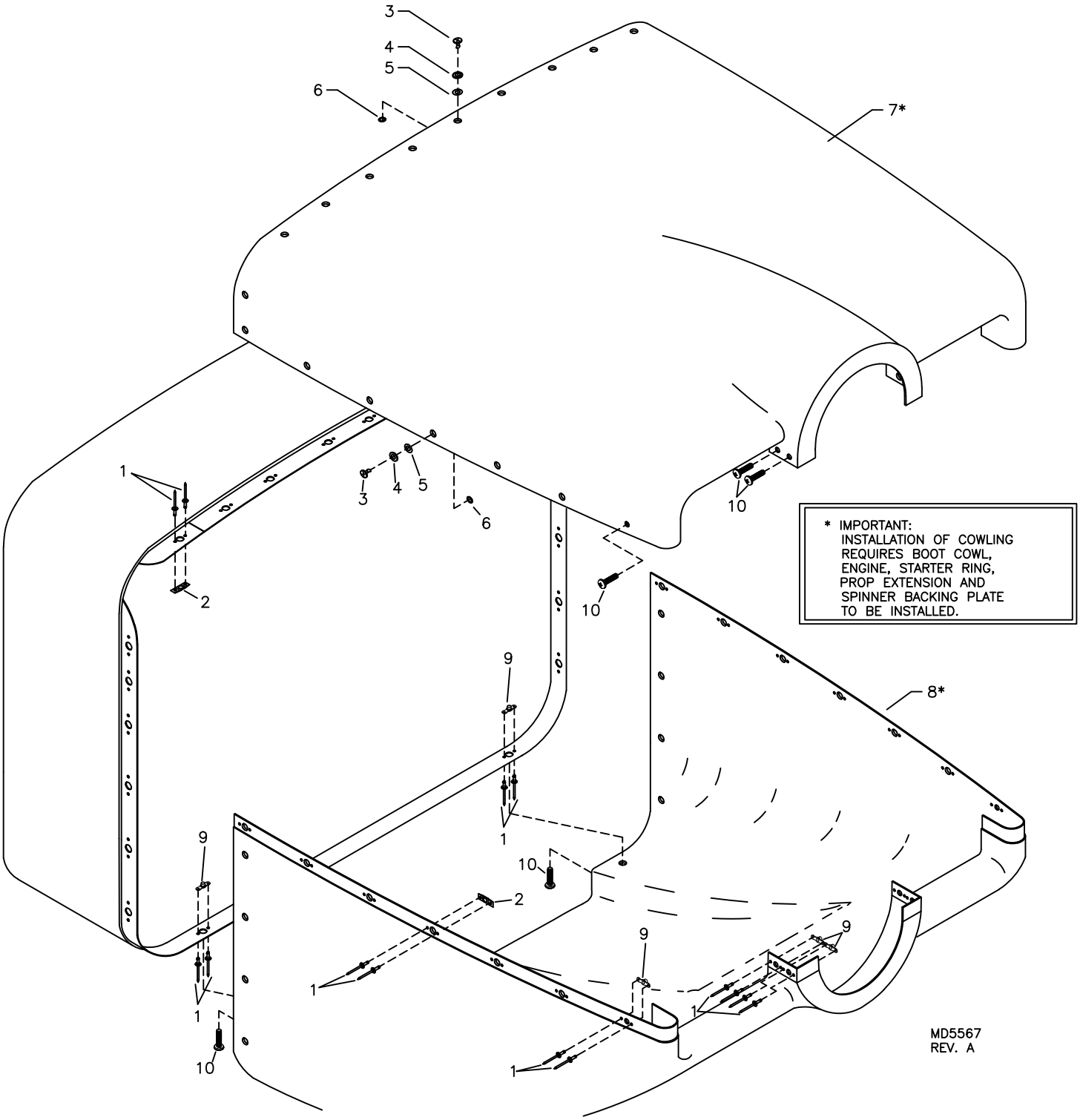

RANS S-21 OUTBOUND
TITAN X-340
COWLING ASSEMBLY & INSTALLATION

RANS S-21 OUTBOUND

TITAN X-340 - COWLING ASSEMBLY & INSTALLATION

#	DESCRIPTION	PART NUMBER	QUANTITY
1.	3/32" Aluminum Rivet	40APR1/4	78
2.	1/4 Turn Receptacle	#302	31
3.	1/4 Turn Stud *	#220	16
3.	1/4 Turn Stud *	#180	2
3.	1/4 Turn Stud *	#240	11
3.	1/4 Turn Stud *	#200	16
3.	1/4 Turn Stud *	#260	6
4.	Rubber Washer	#201	31
5.	Wear Washer Nylon	#103	31
6.	Snap Ring	#101	31
7.	Cowling - Upper - Titan X-340	KPCW0049	1
8.	Cowling - Lower - Titan X-340	KPCW0050	1
9.	3/16" Nut Plate	K-1000-3	8
10.	Pan Head Phillips Bolt (5/8" long)	KSHW0071	8

* Use as needed for secure attachment

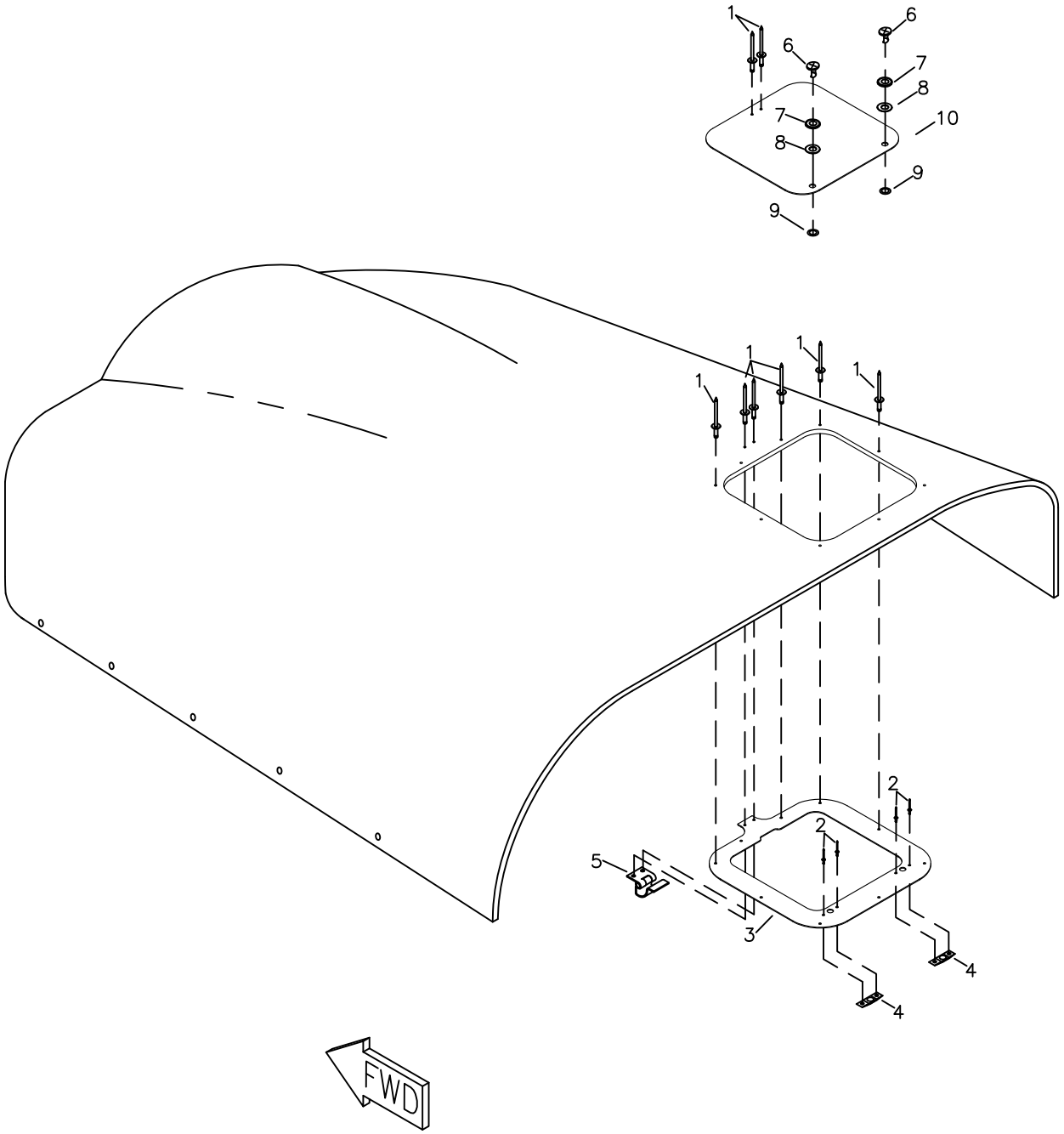

RAMS S-21 OUTBOUND
TITAN X-340
OIL CHECK DOOR INSTALLATION

MD5140
REV. – ORIG

RANS S-21 OUTBOUND

TITAN X-340 - OIL CHECK DOOR INSTALLATION

#	DESCRIPTION	PART NUMBER	QUANTITY
1.	1/8" Aluminum Rivet - Avex	1691-0410	13
2.	3/32" Aluminum Rivet	40APR1/4	4
3.	Oil Door Frame	KPCW0048	1
4.	1/4 Turn Receptacle	#302	2
5.	Oil Door Hinge	KSHW0053	1
6.	1/4 Turn Stud	#180	2
7.	Rubber Washer	#201	2
8.	Wear Washer Nylon	#103	2
9.	Snap Ring	#101	2
10.	Oil Door	KPCW0047	1

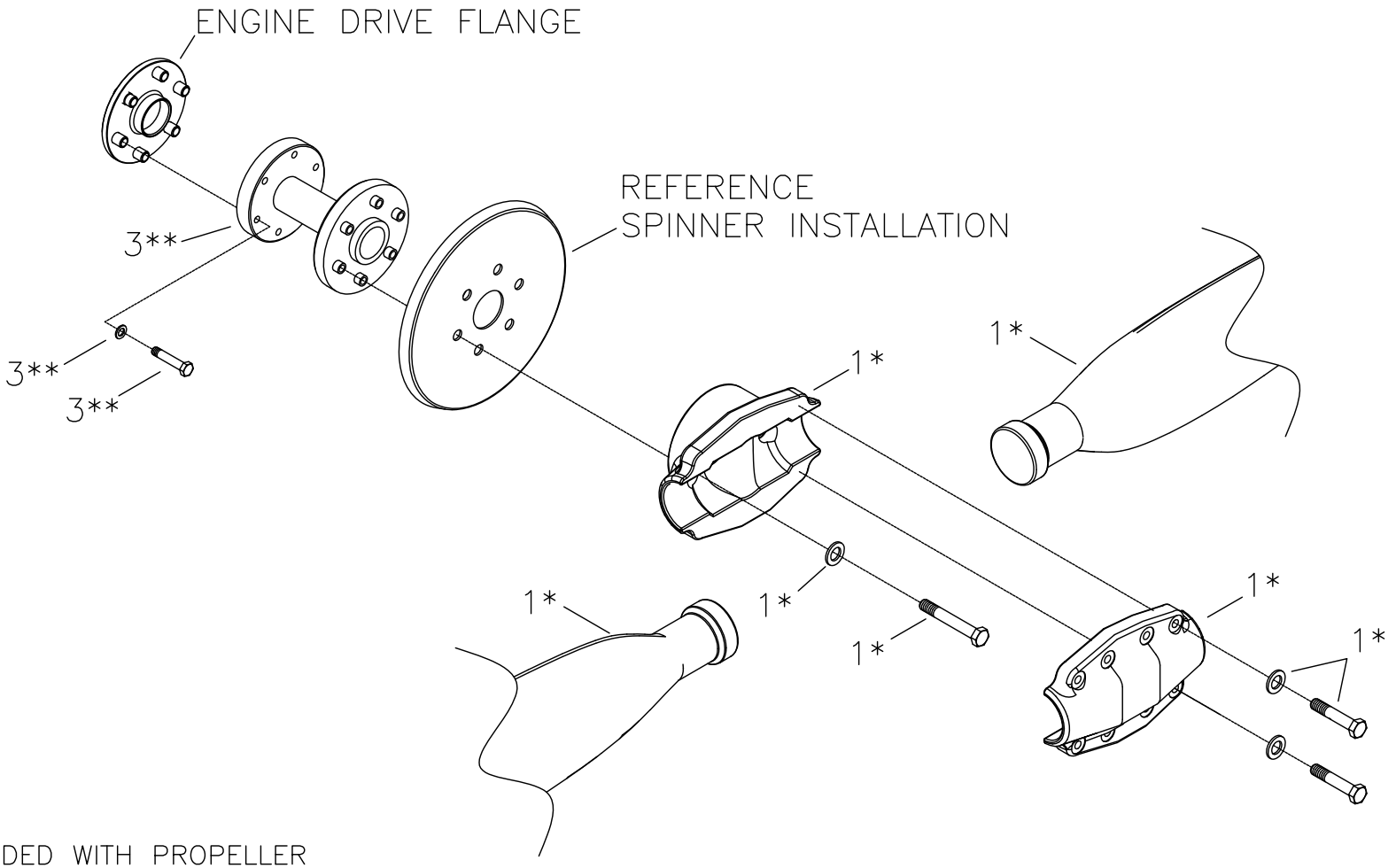

* INCLUDED WITH PROPELLER
** INCLUDED WITH EXTENSION ASSEMBLY

RANS S-21 OUTBOUND
TITAN X-340
WHIRLWIND PROPELLER INSTALLATION

MD5146
REV. – ORIG

RANS S-21 OUTBOUND

TITAN X-340 - WHIRLWIND PROPELLER INSTALLATION

#	DESCRIPTION	PART NUMBER	QUANTITY
1.	2-Blade - Propeller	KSPR0004	1
2.	Spinner Backing Plate - 13" **	-----	0
3.	4" Prop Extension Assembly (SAE#2) *	KSPW0108	1

* Mounting Hardware included with Prop or Extension Assembly
** Referenced from Spinner Assembly