RANS S-7S COURIER 2015

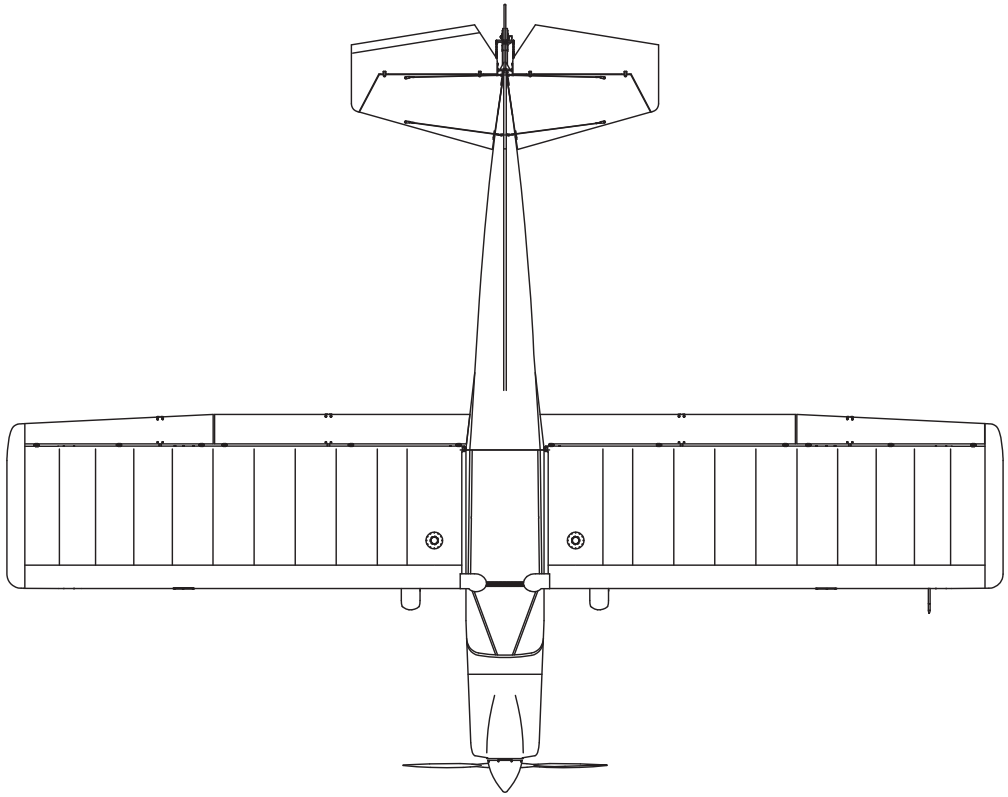

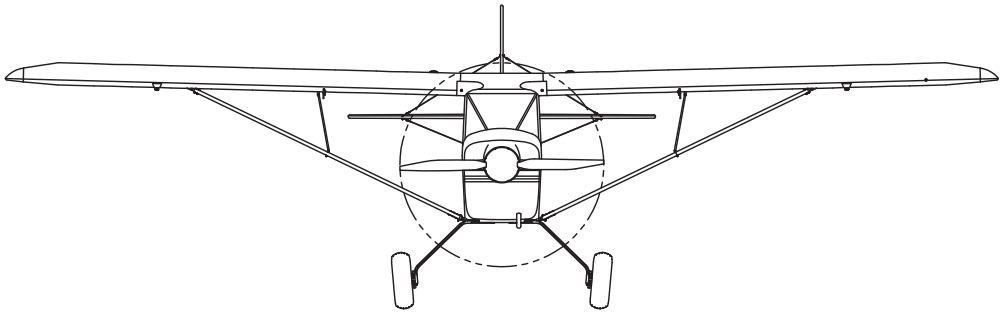

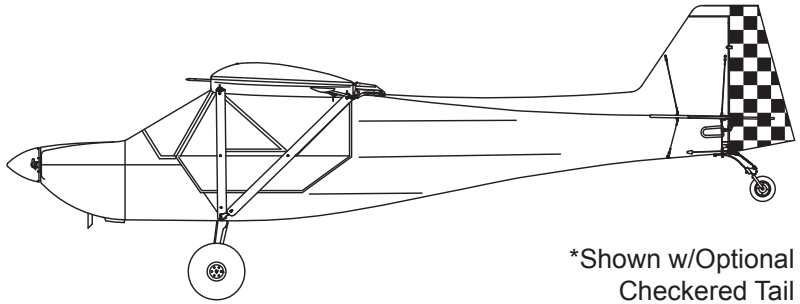

*Shown w/Optional
Checkered Tail

RANS
4600 Highway 183 Alternate
Hays, KS 67601
(785) 625-6346
email: rans@rans.com
website: www.rans.com

DESIGNED BY:
RANDY SCHLITTER