S-19 VENTERRA

PARTS MANUAL

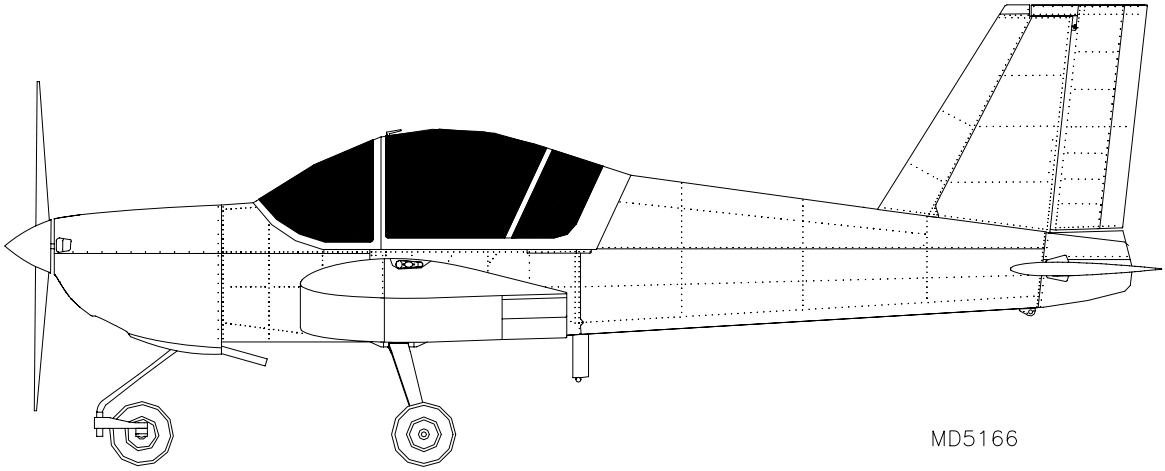

Serial Number:

Registration Number:

COPYRIGHT ©

RANS DESIGNS
4600 HWY 183 Alt
HAYS, KANSAS, USA 67601
785-625-6346
www.rans.com

REVISION FORM

Revision #	Pages Affected	Description	Date
Original	all	Original Issue	04/01/2011

PARTS MANUAL INDEX

EMPENNAGE (TAIL) GROUP 02
WING ASSEMBLY 03
FLAP AND AILERON ASSEMBLY 04
FUSELAGE – CENTER SECTION 05
FUSELAGE – FORWARD SECTION 06
FUSELAGE – TAILCONE 07
FUSELAGE – SYSTEMS 08
MAIN & NOSE GEAR 09
WINDSHIELD AND CANOPY 10
SEAT ASSEMBLY AND INSTALLATION 11
OPTIONAL INTERIOR 12
ENGINE INSTALLATION 13
SPINNER & COWLING INSTALLATION 14

02 – EMPENNAGE (TAIL) GROUP

VERTICAL STABILIZER FRAME ASSEMBLY ..... 02-01 - 02-02

VERTICAL STABILIZER SKIN INSTALLATION ..... 02-03 - 02-04

VERTICAL STABILIZER INSTALLATION ..... 02-05 - 02-06

RUDDER FRAME ASSEMBLY ..... 02A-01 - 02A-02

RUDDER SKIN INSTALLATION ..... 02A-03 - 02A-04

RUDDER INSTALLATION ..... 02A-05 - 02A-06

STABILATOR FRAME ASSEMBLY #1 ..... 02B-01 - 02B-02

STABILATOR FRAME ASSEMBLY #2 ..... 02B-03 - 02B-04

STABILATOR FRAME ASSEMBLY #3 ..... 02B-05 - 02B-06

STABILATOR SKIN INSTALLATION ..... 02B-07 - 02B-08

STABILATOR INSTALLATION ..... 02B-09 - 02B-10

ANTI-SERVO/TRIM TAB ASSEMBLY ..... 02C-01 - 02C-02

ANTI-SERVO/TRIM TAB INSTALLATION ..... 02C-03 - 02C-04

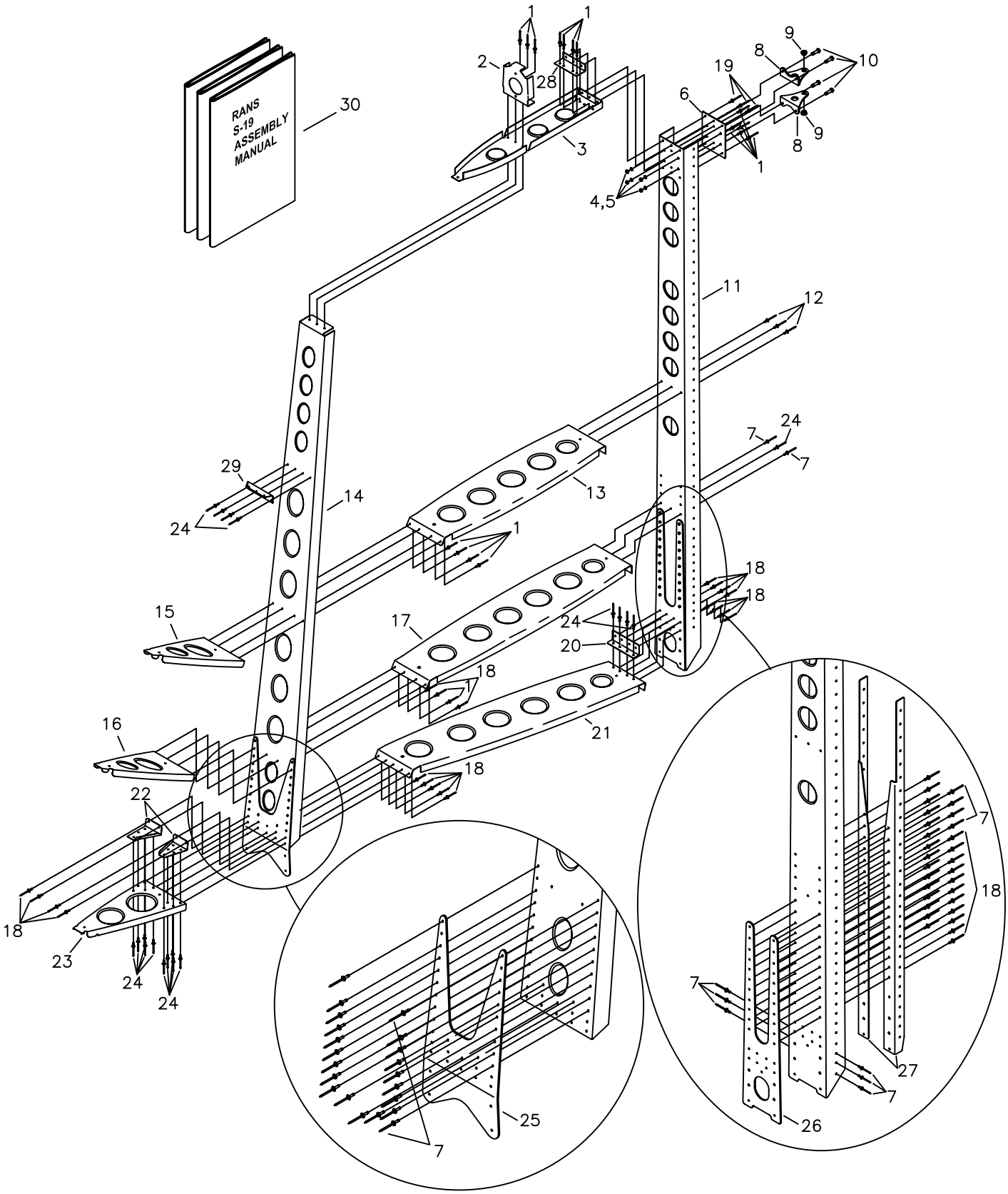

RANS S-19 VENTERRA

MD4785

VERTICAL STABILIZER FRAME ASSEMBLY

RANS S-19 VENTERRA - Vertical Stabilizer Frame Assembly

#	DESCRIPTION	PART NUMBER	QUANTITY
1 .	1/8" Aluminum Rivet - Cherry Q	AAPQ-42	18
2 .	Vertical Stabilizer Tip Bulkhead	KPVS0070	1
3 .	Vertical Stabilizer Rib #1	KPVS0059	1
4 .	3/16" Thick Washer	AN960-10	4
5 .	3/16" Tensile Nut	AN365-1032A	4
6 .	Plate Reinforcement	KPVS0078	1
7 .	1/8" Stainless Steel Rivet - Cherry Q	CCPQ-42	37
8 .	Vertical Stabilizer Hinge	KPVS0077	2
9 .	Flange Bushing	KSAC0019-3	2
10 .	3/16" Bolt	AN3-5A	4
11 .	Channel - Stabilizer Rear Spar	KPVS0066	1
12 .	1/8" Stainless Steel Rivet - Cherry Q	CCPQ-41	3
13 .	Vertical Stabilizer Rib #2	KPVS0072	1
14 .	Channel - Stabilizer Front Spar	KPVS0065	1
15 .	Vertical Stabilizer Rib #3	KPVS0058	1
16 .	Vertical Stabilizer Rib #5	KPVS0064	1
17 .	Vertical Stabilizer Rib #4	KPVS0073	1
18 .	1/8" Stainless Steel Rivet - Cherry Q	CCPQ-43	43
19 .	1/8" Aluminum Rivet - Cherry Q	AAPQ-43	3
20 .	Vertical Stabilizer - Rib Stiffener	KPVS0061	1
21 .	Vertical Stabilizer Rib #6	KPVS0056	1
22 .	Vertical Stabilizer - Rib Stiffener - RH	KPVS0062-R	1
22 .	Vertical Stabilizer - Rib Stiffener - LH	KPVS0062-L	1
23 .	Vertical Stabilizer Rib #7	KPVS0057	1
24 .	1/8" Aluminum Rivet - Cherry Q	AAPQ-41	19
25 .	Vertical Stabilizer Plate - Front Spar	KPVS0067	1
26 .	Vertical Stabilizer Plate - Rear Spar	KPVS0060	1
27 .	Stabilizer Spar - Reinforcing Angle - LH	KPVS0069-L	1
27 .	Stabilizer Spar - Reinforcing Angle - RH	KPVS0069-R	1
28 .	Rib Reinforcement	KPVS0079	1
29 .	Vertical Stabilizer Spar Stiffener	KPVS0080	1
30 .	S-19 Assembly Manual on CD - Empennage	S-19 Assembly Manual	1

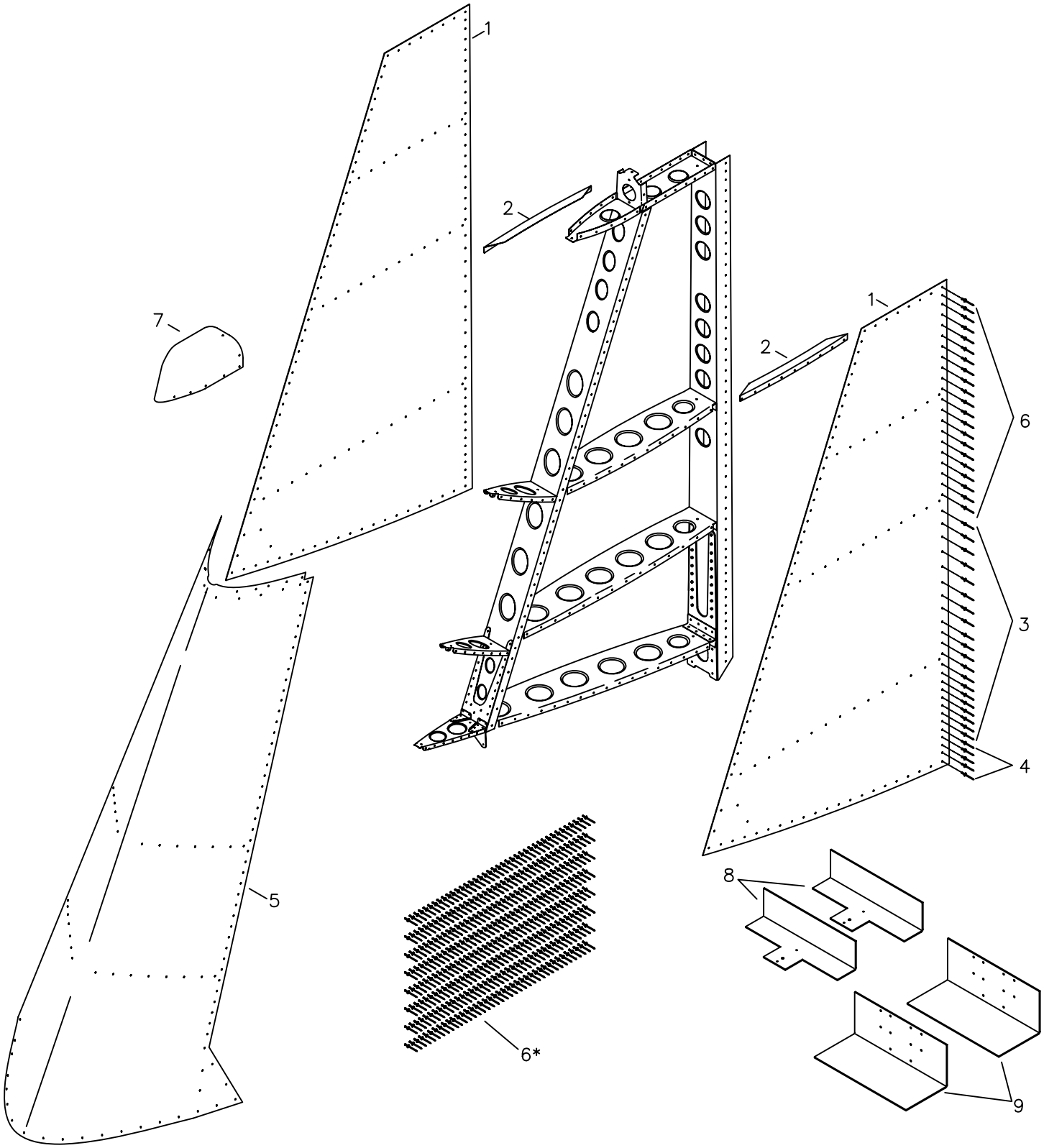

*RIVET AS SHOWN (ALL OTHERS AVEX 1691–0410 ITEM #6)

MD4786

RANS S-19 VENTERRA
VERTICAL STABILIZER SKIN INSTALLATION

RANS S-19 VENTERRA - Vertical Stabilizer Skin Installation

#	DESCRIPTION	PART NUMBER	QUANTITY
1 .	Vertical Stabilizer Side Skin	KPVS0074	2
2 .	Vertical Stabilizer - Skin Stiffener *	KPVS0068	1
3 .	1/8" Aluminum Rivet - Cherry Q	AAPQ-42	40
4 .	1/8" Stainless Steel Rivet - Cherry Q	CCPQ-42	10
5 .	Vertical Stabilizer FWD Skin	KPVS0075	1
6 .	1/8" Aluminum Rivet - Avex	1691-0410	349
7 .	Vertical Stabilizer Tip	KPVS0071	1
8 .	Vertical Stabilizer Jig - Tip	KPVS0082	2
9 .	Vertical Stabilizer Jig - Root	KPVS0081	2

* Builder modifies.

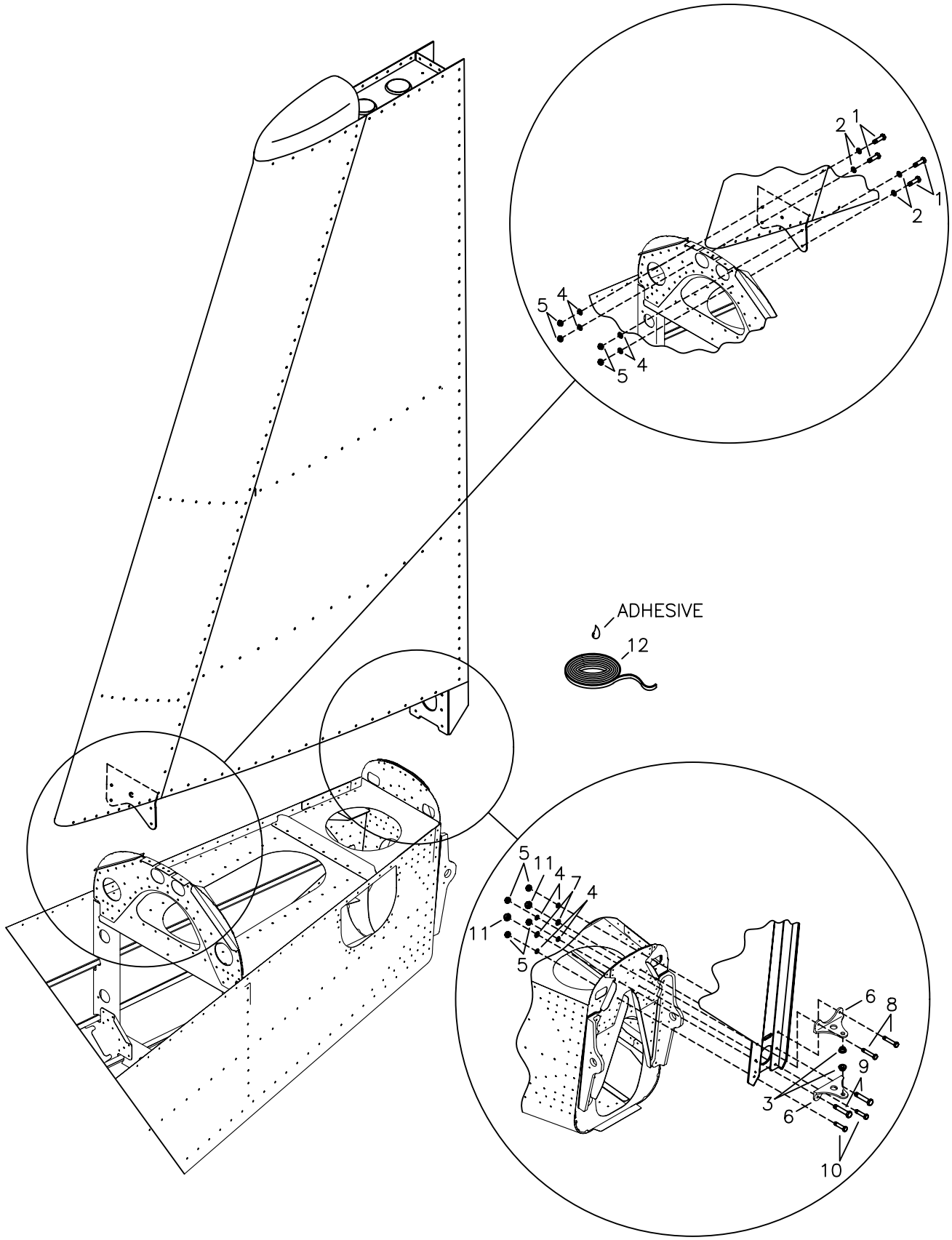

RANS S-19 VENTERRA
VERTICAL STABILIZER INSTALLATION

RANS S-19 VENTERRA - Vertical Stabilizer Installation

#	DESCRIPTION	PART NUMBER	QUANTITY
1 .	3/16" Bolt	AN3-5A	4
2 .	3/16" Thin Washer	AN960-10L	4
3 .	Flange Bushing	KSAC0019-3	2
4 .	3/16" Thick Washer	AN960-10	8
5 .	3/16" Tensile Nut	AN365-1032A	8
6 .	Vertical Stabilizer Hinge	KPVS0076	2
7 .	1/4" Thin Washer	AN960-416L	2
8 .	3/16" Bolt	AN3-7A	2
9 .	1/4" Bolt	AN4-7A	2
10 .	3/16" Bolt	AN3-6A	2
11 .	1/4" Tensile Nut	AN365-428A	2
12 .	Edge Trim	X1011	6 ft.

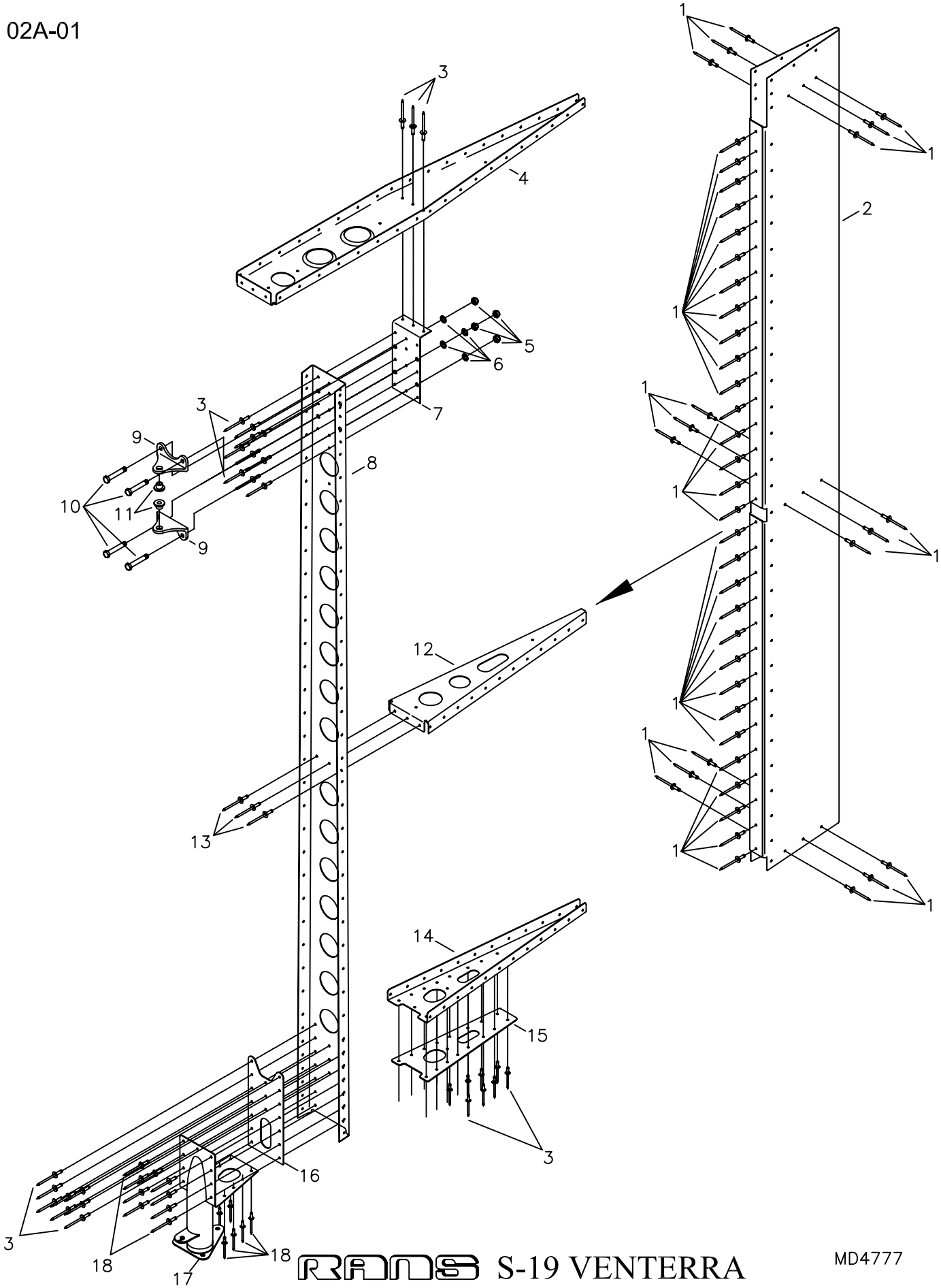

RANS S-19 VENTERRA
RUDDER FRAME ASSEMBLY

RANS S-19 VENTERRA - Rudder Frame Assembly

#	DESCRIPTION	PART NUMBER	QUANTITY
1 .	1/8" Aluminum Rivet - Avex	1691-0410	50
2 .	Rudder Trailing Edge	KPRD0072	1
3 .	1/8" Aluminum Rivet - Cherry Q	AAPQ-42	29
4 .	Rudder Tip Rib	KPRD0064	1
5 .	3/16" Shear Nut	AN364-1032A	4
6 .	3/16" Thin Washer	AN960-10L	4
7 .	Rudder Spar Reinforcement	KPRD0063	1
8 .	Rudder Spar	KPRD0070	1
9 .	Rudder Hinge	KPRD0025	2
10 .	3/16" Bolt	AN3-4A	4
11 .	Flange Bushing	KSAC0019-3	2
12 .	Rudder Rib #2	KPRD0068	1
13 .	1/8" Aluminum Rivet - Cherry Q	AAPQ-41	3
14 .	Rudder Rib #1	KPRD0067	1
15 .	Plate Reinforcement	KPRD0066	1
16 .	Rudder Plate	KPRD0065	1
17 .	Rudder Torque Tube	KPRD0071	1
18 .	1/8" Stainless Steel Rivet - Cherry Q	CCPQ-43	17

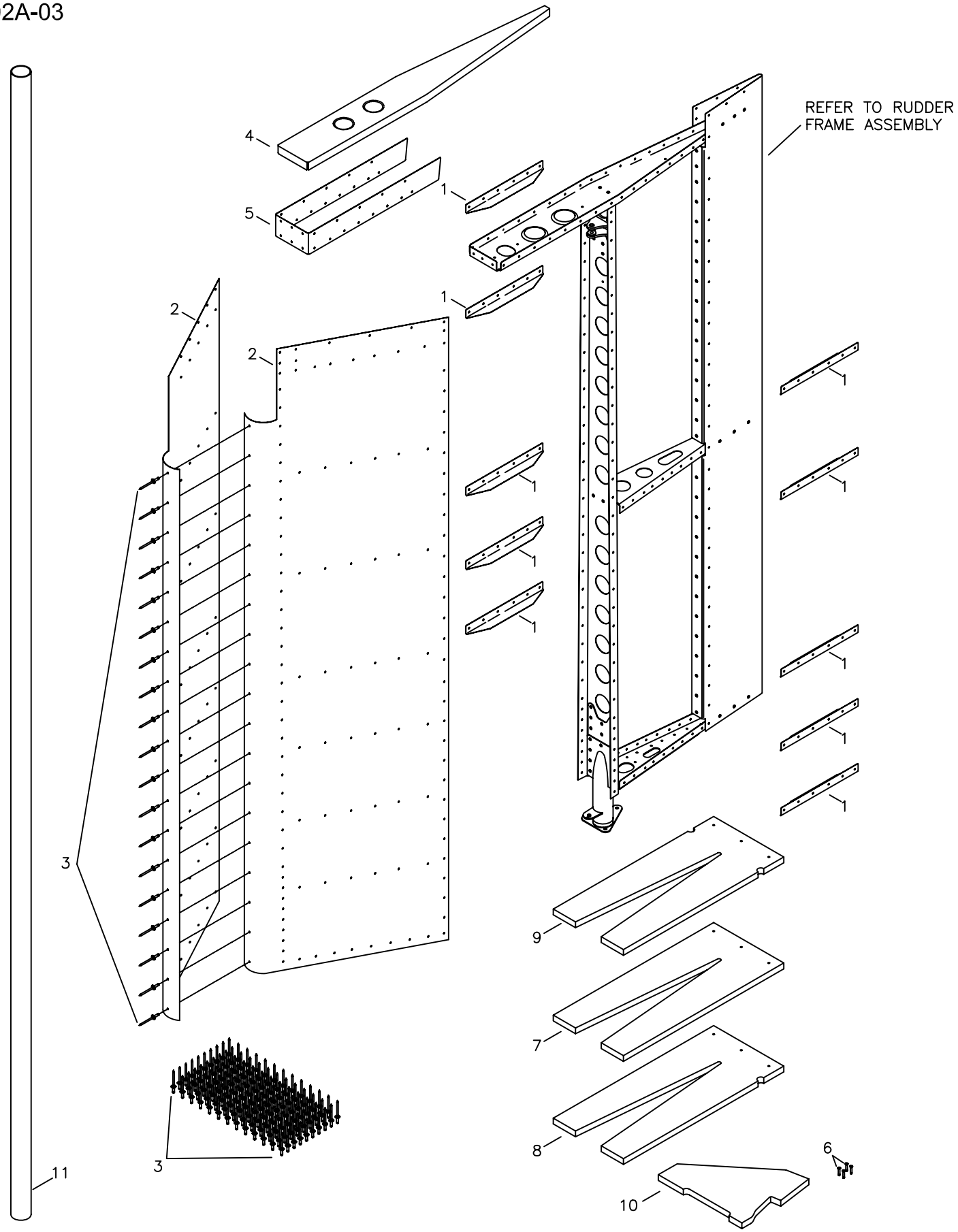

RANS S-19 VENTERRA
RUDDER SKIN INSTALLATION

MD4778

RANS S-19 VENTERRA - Rudder Skin Installation

#	DESCRIPTION	PART NUMBER	QUANTITY
1 .	Skin Stiffener *	KPRD0069	2
2 .	Rudder Skin *	KPRD0073	2
3 .	1/8" Aluminum Rivet - Avex	1691-0410	309
4 .	Rudder Closeout Rib	KPRD0076	1
5 .	Rudder Strap	KPRD0074	1
6 .	Wood Screw	PPP4-38Z	4
7 .	Rudder Jig - Center	KPRD0075-1	1
8 .	Rudder Jig - Root	KPRD0075-2	1
9 .	Rudder Jig - Tip	KPRD0075-3	1
10 .	Rudder Jig - Tip Angle	KPRD0075-4	1
11 .	1-1/4" x 95" Tubing **	-----	0

* Builder modifies.
** Builder Supplied

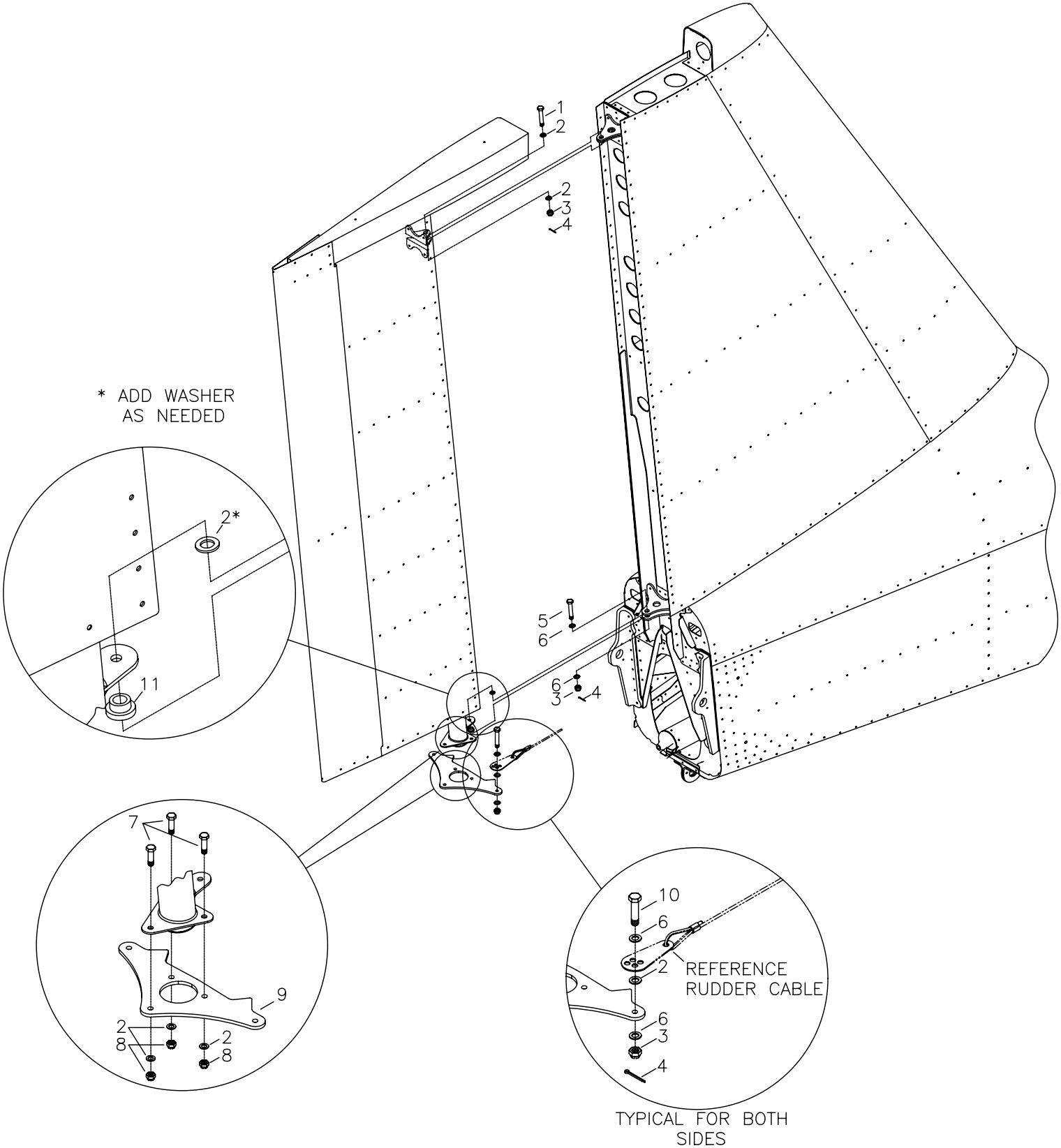

MD5073

RANS S-19 VENTERRA
RUDDER INSTALLATION

RANS S-19 VENTERRA - Rudder Installation

#	DESCRIPTION	PART NUMBER	QUANTITY
1 .	3/16" Bolt	AN3-11	1
2 .	3/16" Thin Washer	AN960-10L	8
3 .	3/16" Castle Nut	AN310-3	4
4 .	Cotter Pin - Small	MS24665-134	4
5 .	3/16" Bolt	AN3-10	1
6 .	3/16" Thick Washer	AN960-10	6
7 .	3/16" Bolt	AN3-4A	3
8 .	3/16" Shear Nut	AN364-1032A	3
9 .	Rudder Horn	KPRD0078	1
10 .	3/16" Bolt	AN3-5	2
11 .	Flange Bushing	KSAC0019-3	1

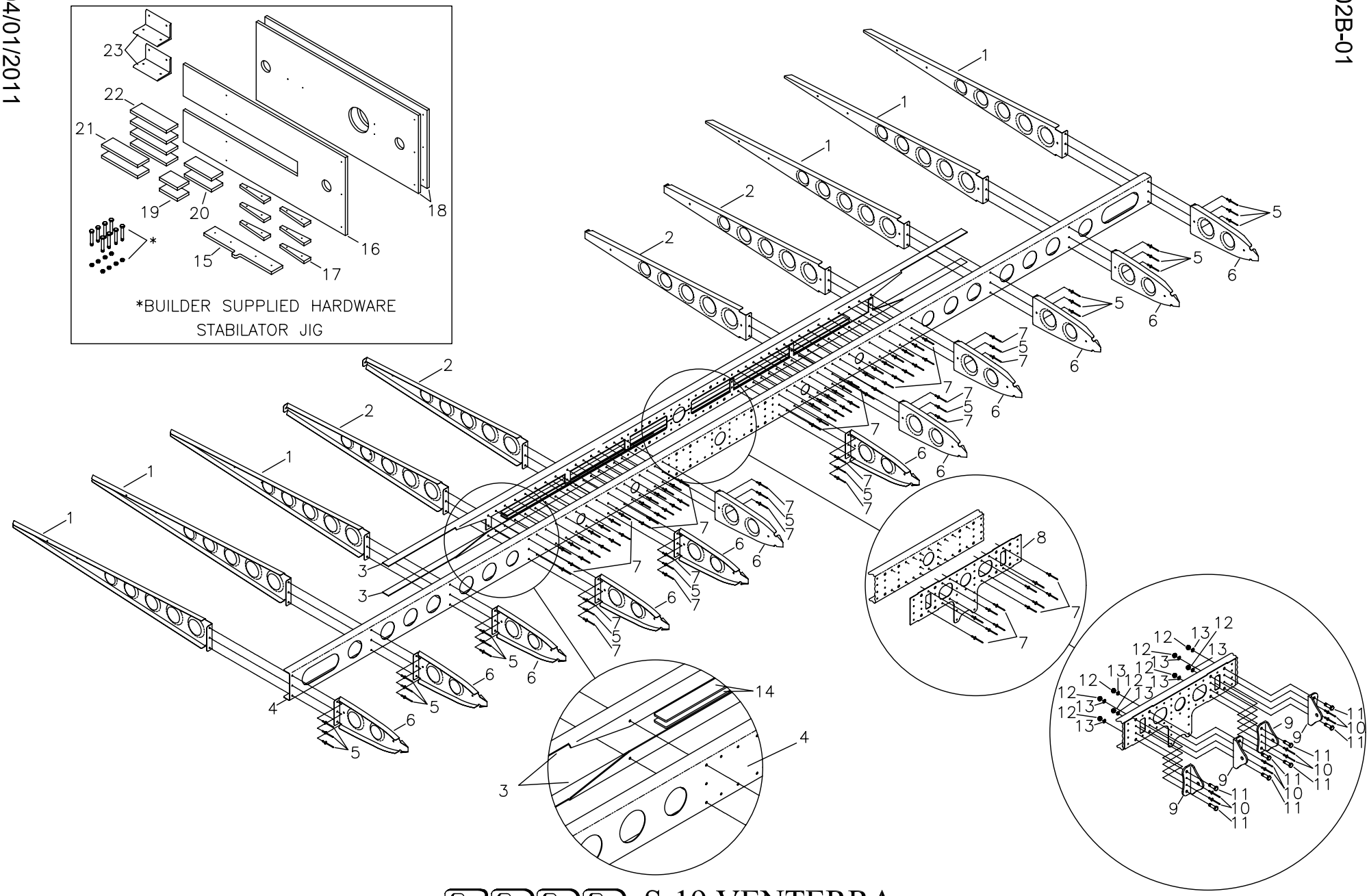

RANS S-19 VENTERRA
STABILATOR FRAME ASSEMBLY #1

RANS S-19 VENTERRA - Stabilator Frame Assembly #1

#	DESCRIPTION	PART NUMBER	QUANTITY
1 .	Stabilator Rib - #4, 5 & 6	KPHS0050	6
2 .	Stabilator Rib - #2 & 3	KPHS0051	4
3 .	Stabilator Spar - Angle	KPHS0043	2
4 .	Stabilator Spar	KPHS0042	1
5 .	1/8" Aluminum Rivet - Cherry Q	AAPQ-42	18
6 .	Stabilator - Nose Rib	KPHS0052	12
7 .	1/8" Stainless Steel Rivet - Cherry Q	CCPQ-42	64
8 .	Stabilator - Plate	KPHS0055	1
9 .	Angle Stabilator Hinge	KPHS0058	4
10 .	1/8" Stainless Steel Rivet - Cherry Q	CCPQ-44	8
11 .	3/16" Bolt	AN3-5A	8
12 .	3/16" Shear Nut	AN364-1032A	8
13 .	3/16" Thin Washer	AN960-10L	8
14 .	Stabilator Spar - Bar	KPHS0044	2
15 .	Stabilator Jig	KPHS0067-1	1
16 .	Stabilator Jig	KPHS0067-2	1
17 .	Stabilator Jig	KPHS0067-3	6
18 .	Stabilator Jig	KPHS0067-4	2
19 .	Stabilator Jig - Spacer Block	KPHS0067-5	2
20 .	Stabilator Jig - Spacer Block	KPHS0067-6	2
21 .	Stabilator Jig - Spacer Block	KPHS0067-7	2
22 .	Stabilator Jig - Spacer Block	KPHS0067-8	4
23 .	Stabilator Jig - Angle	KPHS0068	2

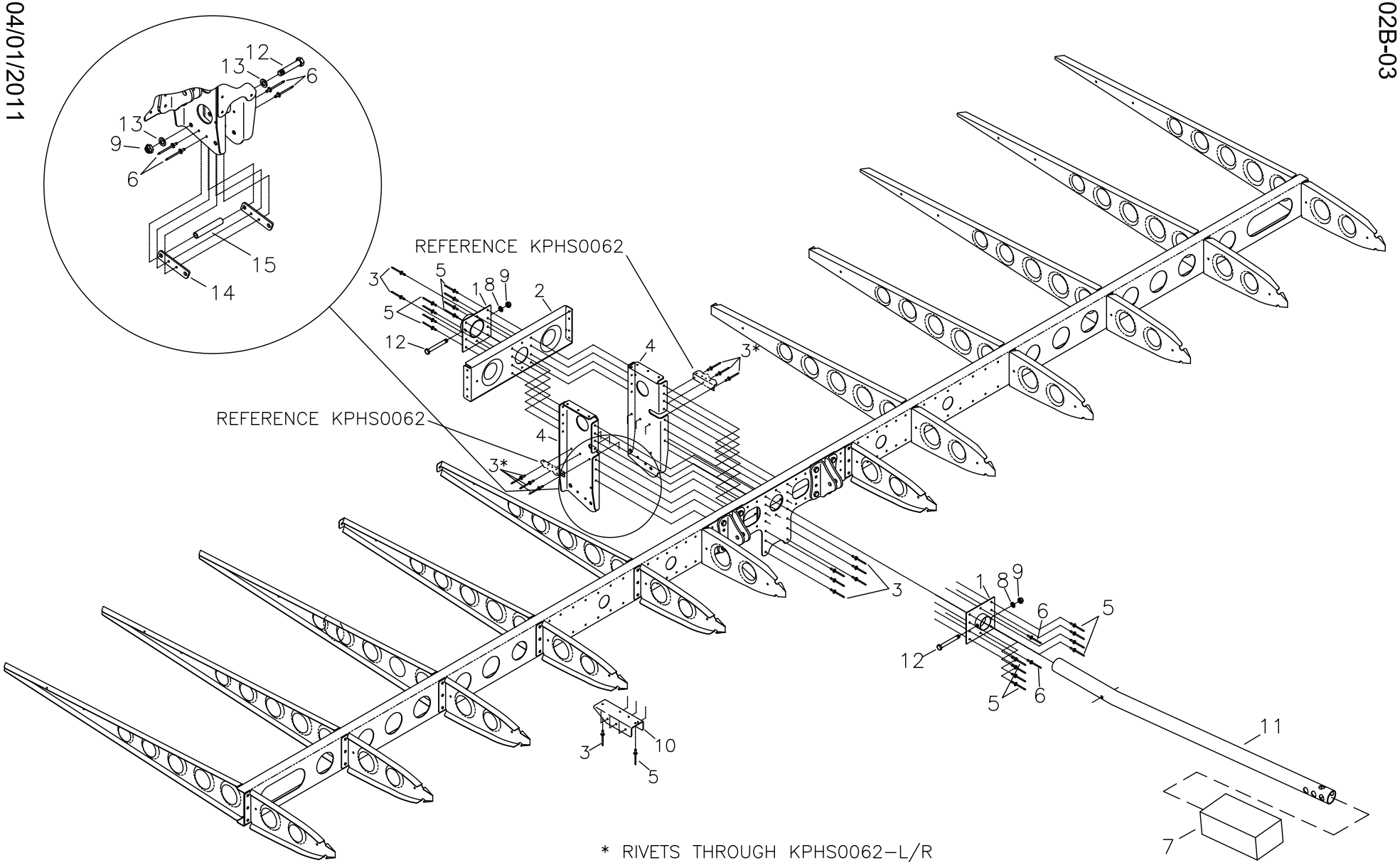

RANS S-19 VENTERRA
STABILATOR FRAME ASSEMBLY #2

MD4781

RANS S-19 VENTERRA - Stabilator Frame Assembly #2

#	DESCRIPTION	PART NUMBER	QUANTITY
1 .	Rear Balance Tube Attach	KPHS0059	2
2 .	Torque Box Channel	KPHS0046	1
3 .	1/8" Stainless Steel Rivet - Cherry Q	CCPQ-42	15
4 .	Actuator Horn - LH	KPHS0056-L	1
4 .	Actuator Horn - RH	KPHS0056-R	1
5 .	1/8" Stainless Steel Rivet - Cherry Q	CCPQ-44	17
6 .	1/8" Stainless Steel Rivet - Cherry Q	CCPQ-43	6
7 .	Lead Balance Weight ***	-----	0
8 .	3/16" Thick Washer	AN960-10	2
9 .	3/16" Shear Nut	AN364-1032A	3
10 .	Channel - Stabilator	KPHS0057	1
11 .	Balance Arm	KPHS0060	1
12 .	3/16" Bolt	AN3-15A	3
13 .	3/16" Thin Washer	AN960-10L	2
14 .	Horn Reinforcement *	KPHS0074	1
15 .	1/4" x .028 x 7/8" Bushing **	KAAC0044-2	0

* Builder modifies. ** Builder fabricates from raw stock.
*** Builder Supplied

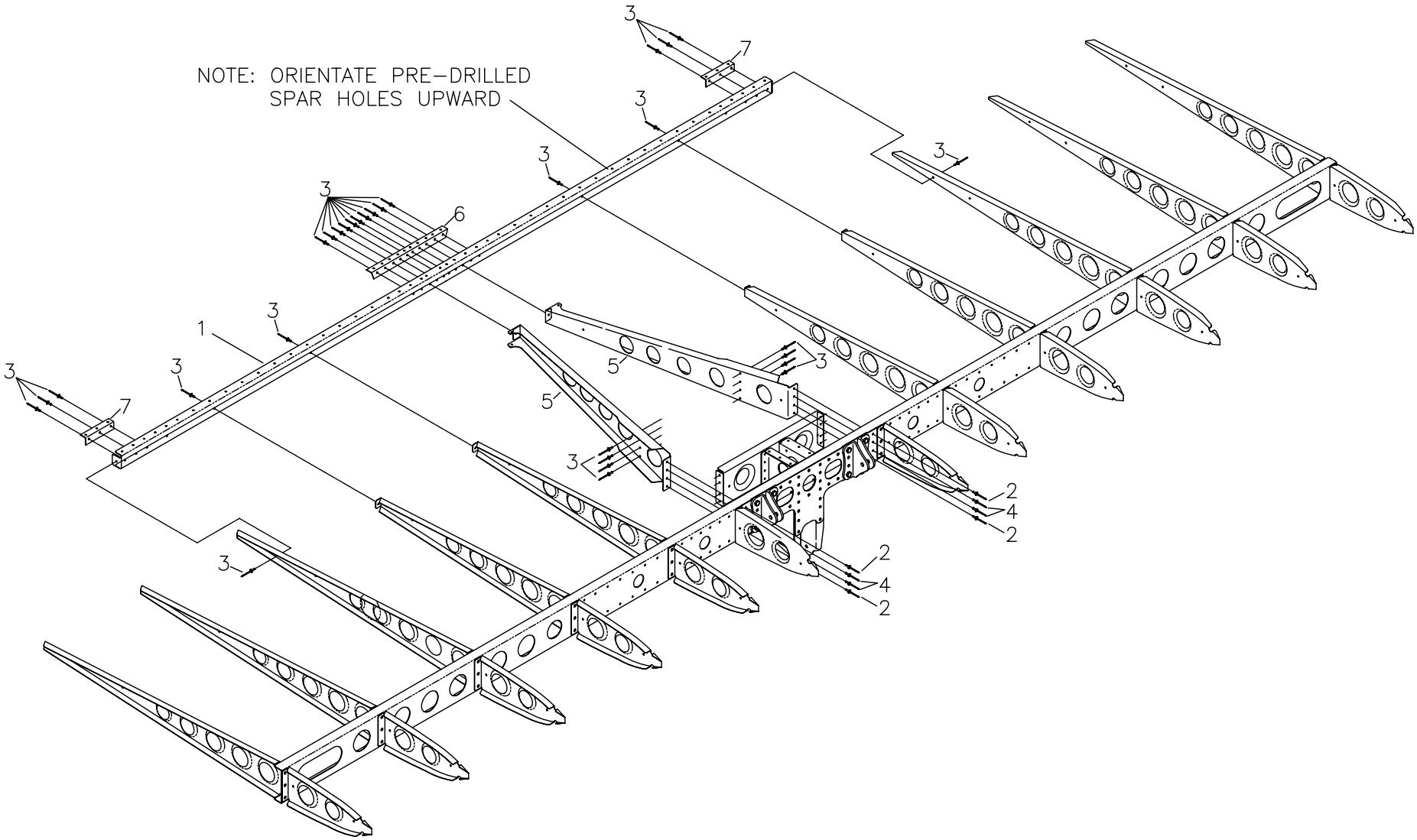

RANS S-19 VENTERRA
STABILATOR FRAME ASSEMBLY #3

MD4781

RANS S-19 VENTERRA - Stabilator Frame Assembly #3

#	DESCRIPTION	PART NUMBER	QUANTITY
1 .	Stabilator - Rear Spar	KPHS0078	1
2 .	1/8" Stainless Steel Rivet - Cherry Q	CCPQ-43	4
3 .	1/8" Stainless Steel Rivet - Cherry Q	CCPQ-41	30
4 .	1/8" Stainless Steel Rivet - Cherry Q	CCPQ-42	4
5 .	Stabilator Rib - #1	KPHS0079	2
6 .	Stabilator Hinge Support - Inner	KPHS0048	1
7 .	Stabilator Hinge Support - Outer	KPHS0049	2

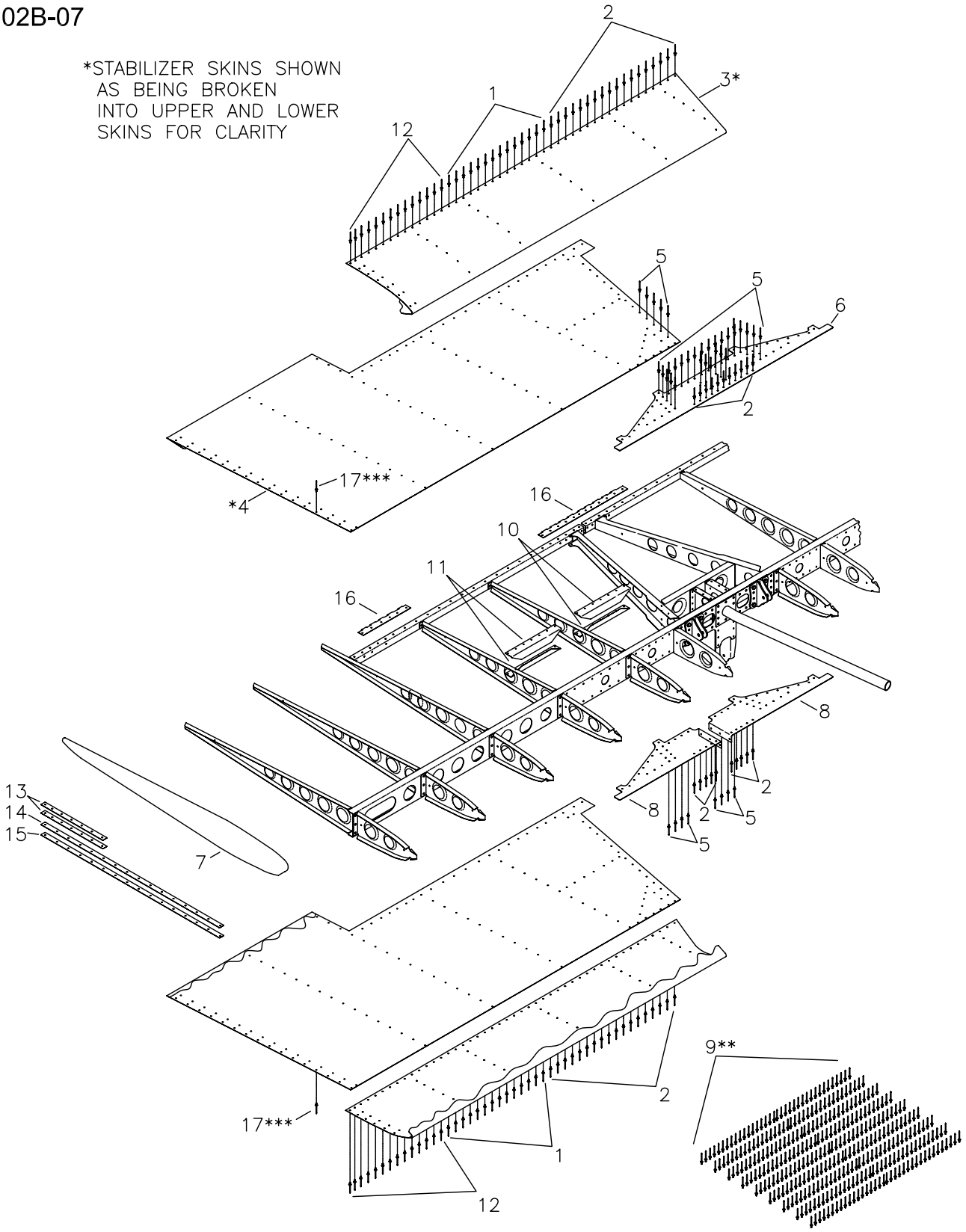

** RIVET AS SHOWN (ALL OTHER RIVETS AVEX 1691-410)

*** TYPICAL RIVET FOR STABILATOR TIP ATTACHMENT

RANS S-19 VENTERRA
STABILATOR SKIN INSTALLATION

MD4782

RANS S-19 VENTERRA - Stabilator Skin Installation

#	DESCRIPTION	PART NUMBER	QUANTITY
1 .	1/8" Aluminum Rivet - Cherry Q	AAPQ-43	65
2 .	1/8" Stainless Steel Rivet - Cherry Q	CCPQ-44	110
3 .	Stabilator Skin - FWD	KPHS0063	2
4 .	Stabilator Skin - AFT - LH	KPHS0064-L	1
4 .	Stabilator Skin - AFT - RH	KPHS0064-R	1
5 .	1/8" Stainless Steel Rivet - Cherry Q	CCPQ-42	45
6 .	Stabilator Plate - Top	KPHS0061	1
7 .	Stabilator Tip	KPHS0066	2
8 .	Stabilator Plate - Bottom - LH	KPHS0062-L	1
8 .	Stabilator Plate - Bottom - RH	KPHS0062-R	1
9 .	1/8" Aluminum Rivet - Avex	1691-0410	942
10 .	Skin Stiffener #1 *	KPHS0065	1
11 .	Skin Stiffener #2 *	KPHS0069	1
12 .	1/8" Aluminum Rivet - Cherry Q	AAPQ-42	60
13 .	Stabilator Tip Stiffener Strip	KPHS0070-1	4
14 .	Stabilator Tip Stiffener Strip	KPHS0070-2	2
15 .	Stabilator Tip Stiffener Strip	KPHS0070-3	2
16 .	Trim Tab Hinge *	KPHS0080	1
17 .	3/32" Aluminum Rivet	40APR1/8	88

* Builder modifies.

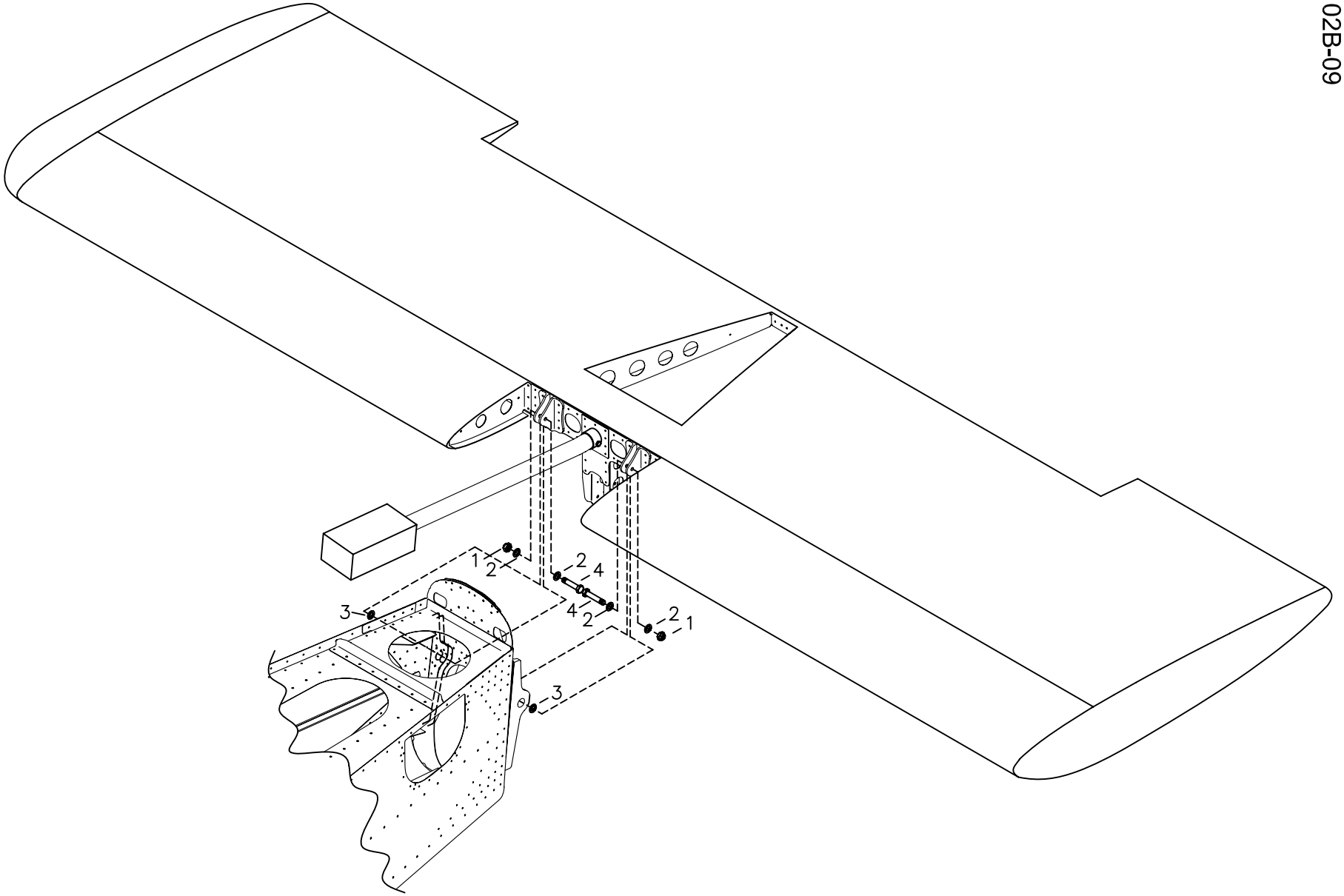

RANS S-19 VENTERRA
STABILATOR INSTALLATION

MD4965

RANS S-19 VENTERRA - Stabilator Installation

#	DESCRIPTION	PART NUMBER	QUANTITY
1 .	1/4" Shear Nut	AN364-428A	2
2 .	1/4" Thin Washer	AN960-416L	4
3 .	1/4" Thick Washer	AN960-416	2
4 .	1/4" Bolt	AN4-11A	2

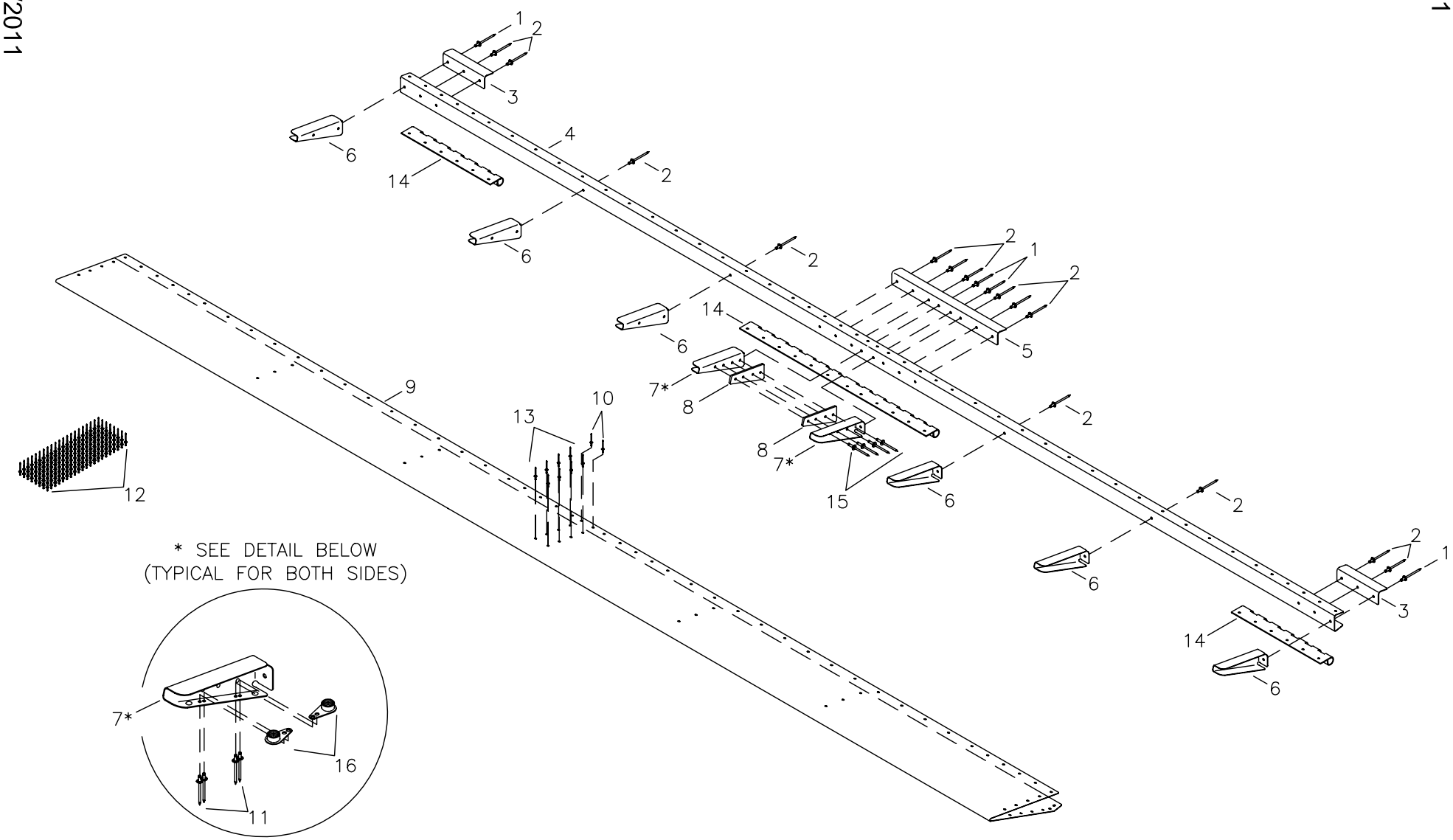

RANS S-19 VENTERRA
ANTI-SERVO/TRIM TAB ASSEMBLY

MD5011

RANS S-19 VENTERRA - Anti-Servo/Trim Tab Assembly

#	DESCRIPTION	PART NUMBER	QUANTITY
1 .	1/8" Aluminum Rivet - Cherry Q	AAPQ-42	4
2 .	1/8" Aluminum Rivet - Cherry Q	AAPQ-41	14
3 .	Trim Tab Hinge Support	KPTR0037	2
4 .	Trim Tab Spar	KPTR0052	1
5 .	Trim Tab Hinge Support	KPTR0036	1
6 .	Trim Tab Rib - RH	KPTR0032-R	3
6 .	Trim Tab Rib - LH	KPTR0032-L	3
7 .	Trim Tab Rib - RH	KPTR0034-R	1
7 .	Trim Tab Rib - LH	KPTR0034-L	1
8 .	Spacer Plate *	KPTR0040	1
9 .	Trim Tab Skin	KPTR0051	1
10 .	1/8" Stainless Steel Rivet - Cherry Q	CCPQ-43	2
11 .	3/32" Aluminum Rivet	40APR1/8	8
12 .	1/8" Aluminum Rivet - Avex	1691-0410	160
13 .	1/8" Stainless Steel Rivet - Cherry Q	CCPQ-42	10
14 .	Trim Tab Hinge *	KPHS0080	0
15 .	1/8" Aluminum Rivet - Cherry Q	AAPQ-45	4
16 .	#8 Single-Ear Nut Plate	MS21051-08	4

* Builder modifies

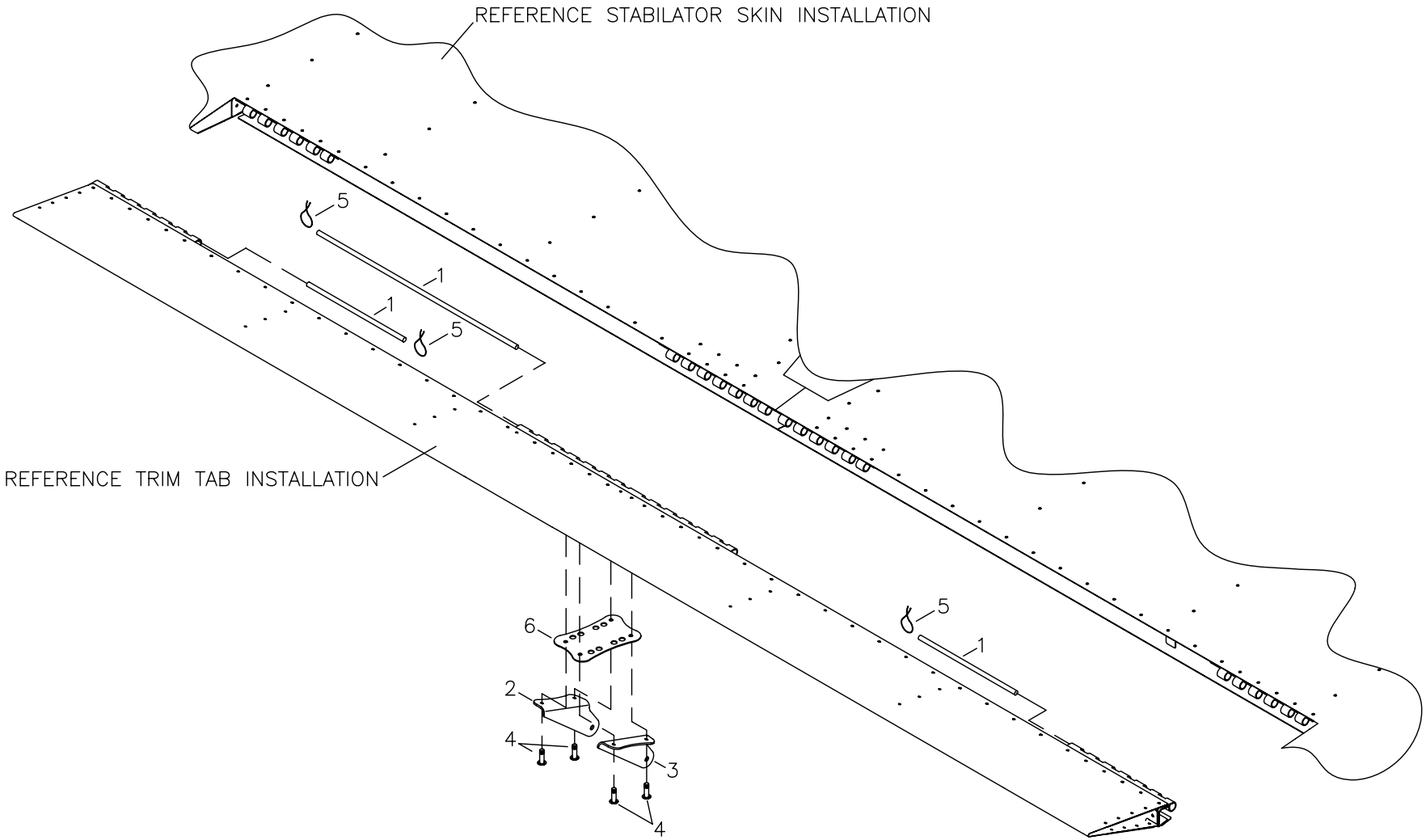

RANS S-19 VENTERRA
ANTI-SERVO/TRIM TAB INSTALLATION

MD5012

RANS S-19 VENTERRA - Anti-Servo/Trim Tab Installation

#	DESCRIPTION	PART NUMBER	QUANTITY
1.	Trim Tab Hinge Pin *	KPHS0080	0
2.	Trim Tab Horn - LH	KPTR0046-L	1
3.	Trim Tab Horn - RH	KPTR0046-R	1
4.	#8 Trusshead Screw	AN526-832R6	4
5.	Safety Wire	-----	0
6.	Spacer Plate	KPTR0039	1

* Builder modifies